Cylinder
SC
SC(Big)
SCT
SCF
SU
SUF
SI
SIF
DNC
QGB
QGBZ
NCQ2
NCQ2(Big)
NCQ2(Long)
NCQS
NCQM
NRQ
SDA
ADVU
ACE(AND)
MAL
MA
MI
NCM2
NCJ2
NCG1
NCJP
TD
TN(TDA)
NCXS
NCXSW
NMGP
NMGG
NCU
NCUJ
NCY3B
NCY3R
NCY1S
NCY1L
STM
NMXH
NMXS
NMXQ
NMHZ2
NMHC2
NMHL2
NMHY2
NMHT2
NMHW2
NMHF2
NMHS2
NMHS3
NMHS4
NMRHQ
NMSQ
NCRA1
NCRQ2
NCRB2
ACK
SRC
QCK
NCK1

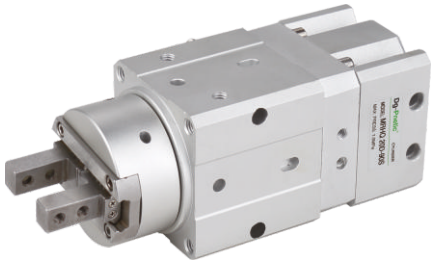

Specifications

Bore size(mm)			10	16	20	25
Fluid			Air (to be filtered by 40μm filter element)			
Gripper action			Double acting, Single acting			
Operating pressure (MPa)	Rotary unit		0.25~0.7		0.25~1.0	
	Gripper unit	Double acting	0.25~0.7	0.1~0.7		
		Single acting	0.35~0.7	0.25~0.7		
Rotation angle			90°±10°, 180°±10°			
Finger opening/closing repeatability			0.01mm			
Gripper maximum operating frequency			180c.p.m			
Ambient and fluid temperature			5 to 60℃			
Adjustable rotation time range			0.07 to 0.3s/90° (at 0.5MPa)			
Allowable kinetic energy (J)			0.0046	0.014	0.034	0.074
Finger opening/closing stroke (mm)			4	6	10	14

Ordering code

NMRH Q 10 D – 90 S – M9NV L □ – M9N L □

Rotary gripper

Gripper

Q	Parallel type: 2 fingers

Bore size

10	10mm
16	16mm
20	20mm
25	25mm

Action

D	Double acting	
S	Single acting	Normally open
C		Normally closed)

Rotation angle

90	90°
180	180°

Single vane

Magnetic switch for air claw opening and closing

N	Without magnetic switch (Built-in magnet)

Lead wire length

Blank	0.5m
L	3m
Z	5m

Magnetic switch for swing detection

Blank	Without magnetic switch (Built-in magnet)

Number of magnetic switches

Blank	2 pcs.
S	1 pc.

Dimensions

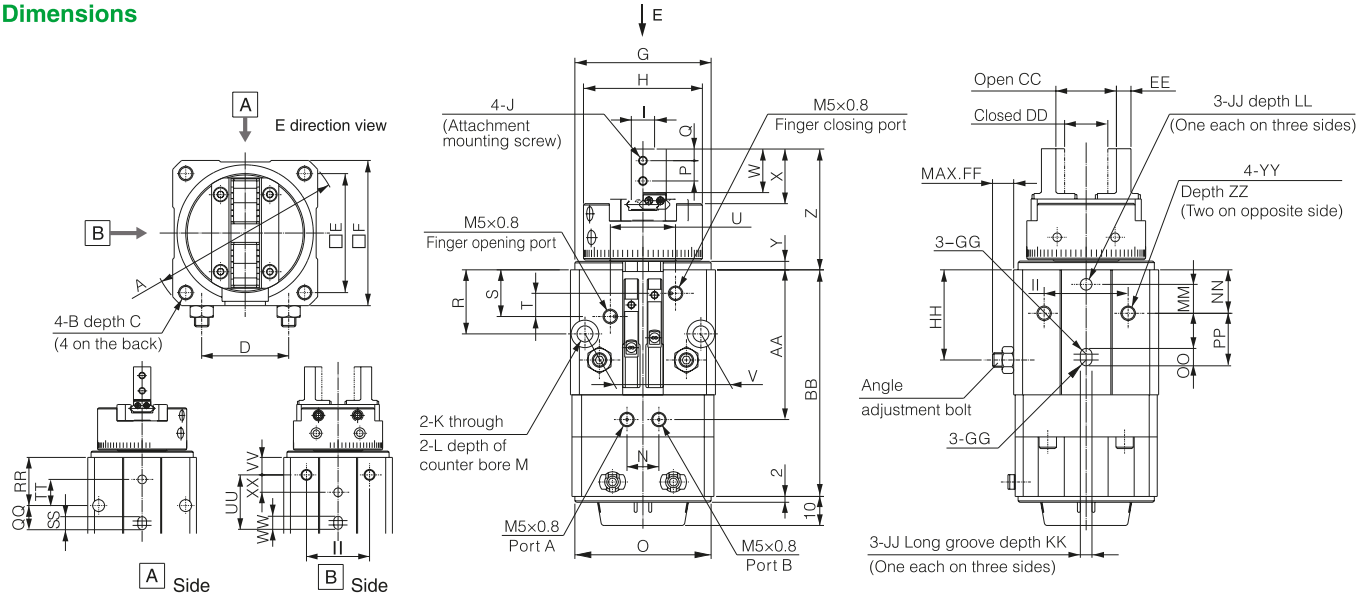

Bore size	A	B	C	D	E	F	G	H	I	J	K	L	M	N	O	P	Q	R	S	T	U	V	W	X	Y	Z	AA	BB
10	Φ54.5	M4×0.7	6	24.5	34	41	$\Phi37h9^{0}_{-0.062}$	Φ31	$5^{0}_{-0.1}$	M2.5×0.45	4.5	8	2.5	11	$\Phi37h9^{0}_{-0.062}$	5.7	3	18	11	4.5	22.5	33	12	13.7	2.5	34	41.5	63
16	Φ66.5	M5×0.8	8	30	41	50	$\Phi47h9^{0}_{-0.062}$	Φ41	$8^{0}_{-0.1}$	M3×0.5	5.5	9.5	3	11	$\Phi47h9^{0}_{-0.062}$	7	4	22	16	8	22.5	40	15	18.8	3	42	51.5	78
20	Φ78	M6×1	10	38.5	48	59	$\Phi54h9^{0}_{-0.074}$	Φ51	$10^{0}_{-0.05}$	M4×0.7	6.5	11	2.8	12	$\Phi50h9^{0}_{-0.062}$	9	5	26	19	9	24	46	20	24.5	3.4	51	62	101
25	Φ93	M6×1	10	47	58	70	$\Phi66h9^{0}_{-0.074}$	Φ64	$12^{0}_{-0.06}$	M5×0.8	8.5	14	4	12	$\Phi50h9^{0}_{-0.062}$	12	6	27.5	23	11	24	54	25	30.4	4	63	69	107

Bore size	CC	DD	EE	FF	GG	HH	II	JJ	KK	LL	MM	NN	OO	PP	QQ	RR	SS	TT	UU	VV	WW	XX	YY	ZZ
10	$15.2^{+2.2}_{0}$	$11.2^{0}_{-0.7}$	$4^{0}_{-0.1}$	6.1	R1.5	25	23	$3h9^{+0.025}_{0}$	3	4	-2	11.5	5	15.5	9	18	5	6	21	6	5	-2	M4×0.7	6
16	$20.9^{+2.2}_{-0.2}$	$14.9^{0}_{-0.7}$	$5^{0}_{-0.1}$	7.3	R2	31	29	$4h9^{+0.030}_{0}$	4	6	10	15	6	18	11	22	6	12	25	8	6	8	M5×0.8	8
20	$26.3^{+2.2}_{-0.2}$	$16.3^{0}_{-0.7}$	$8^{0}_{-0.1}$	9.2	R2	39	36	$5h9^{+0.030}_{0}$	4	6	6.5	16.5	8	27	17.5	26	8	16	27	16.5	8	-6.5	M6×1	9
25	$33.3^{+2.5}_{-0.2}$	$19.3^{0}_{-0.8}$	$10^{0}_{-0.1}$	14	R3	45	42	$6h9^{+0.030}_{0}$	4	8	7	17	8	32	21.5	27.5	8	17.5	32	17	8	-7	M8×1.25	12