Cylinder
SC
SC(Big)
SCT
SCF
SU
SUF
SI
SIF
DNC
QGB
QGBZ
NCQ2
NCQ2(Big)
NCQ2(Long)
NCQS
NCQM
NRQ
SDA
ADVU
ACE(AND)
MAL
MA
MI
NCM2
NCJ2
NCG1
NCJP
TD
TN(TDA)
NCXS
NCXSW
NMGP
NMGG
NCU
NCUJ
NCY3B
NCY3R
NCY1S
NCY1L
STM
NMXH
NMXS
NMXQ
NMHZ2
NMHC2
NMHL2
NMHY2
NMHT2
NMHW2
NMHF2
NMHS2
NMHS3
NMHS4
NMRHQ
NMSQ
NCRA1
NCRQ2
NCRB2
ACK
SRC
QCK
NCK1

Specifications

Bore size(mm)		12	16	20	25	32	40	50	63	80	100
Fluid		Air (to be filtered by 40μm filter element)									
Action mode		Double action Single action: spring press back/spring press out									
Minimum operating pressure	Single action	0.25		0.18		0.17	0.15	0.13	-		
	Double action	0.07	0.05								
Maximum operating pressure		1.0MPa									
Ambient and fluid temperature		Without auto switch: -10 to 70℃ (No freezing) With auto switch: -10 to 60℃ (No freezing)									
Rod end thread		Internal thread (standard), external thread (optional)									
Cushion		None									
Piston speed		50~500mm/s									
Stroke length tolerance		$^{+1.0}_{0}$									
Lubrication		Not required									
Installation form		Through hole(standard), screw hole at both ends(optional)									
Pipe size		M5×0.8				1/8"		1/4"		3/8"	

Note: If you need oil, please use turbine No.1 oil ISOVG32.

Symbol

Double action

Single action

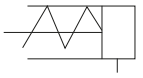

Spring press back

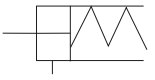

Spring extrusion

Ordering code

N C D Q2 B □ 20 □ - 30 D □ - M9N □

Built in magnetic ring

Blank	No built-in magnetic ring
D	Built-in magnet ring

Installation form

B	Through hole (Standard)
A	Screw holes at both ends
L	Foot seat type
F	Rod side flange
G	Rodless side flange type
D	Binaural ring type

Form

Blank	Compressed air type

Bore size

12	12mm
16	16mm
20	20mm
25	25mm
32	32mm
40	40mm
50	50mm
63	63mm
80	80mm
100	100mm

Tube material

Blank	Thread piping
F*	Built-in quick-change connector

* It is only used for cylinder diameter Φ32~Φ63.
There is no built-in fast replacement mode for gas-liquid combination.

Stroke

(See table below)

Action mode

D	Double action
S	Single action (spring press back)
T	Single action (spring extrusion)

* The cylinder diameter of single acting mode is only Φ12~Φ50.

Body option

Blank	Standard (Rod end internal thread)
C	Rubber cushion Note)
M	Rod end male thread

* Combination of body options ("CM", "FC", "FM", "FCM") is available.
Note: Air-hydro type with rubber bumper is not available.

Magnetic switch type

Blank	Without magnetic switch

* Type of magnetic switch refer to itinerary/Model table of magnetic switch.
* No built-in magnetic ring.

Number of magnetic switches

Blank	2 pcs.
S	1 pc.
n	"n" pcs.

Stroke/magnetic switch type table

Bore size (mm)	Standard stroke (mm)		*Magnetic switch type		
	Double action	Single action	Two wire contact control	Two wire contactless control	Three wire NPN
12, 16	5, 10, 15, 20, 25, 30	5, 10	3C-D-A93(V)L	M9D	M9B
20, 25	5, 10, 15, 20, 25, 30, 35, 40, 45, 50				
32, 40	5,10,15,20,25, 30, 35, 40, 45, 50, 75, 100	10, 20			
50, 63, 80, 100	10, 15, 20, 25, 30, 35, 40, 45, 50, 75, 100				

* The specifications and characteristics of magnetic switches can be referred to the magnetic open series. Behind the model of magnetic switch, the length of the attached wire indicates the mark: unlabeled-0.5m, L-3m, Z-5m
example: M9N, M9NL

Permissible kinetic energy (J)

Bore size (mm)	12	16	20	25	32	40	50	63	80	100
Standard form	0.022	0.038	0.055	0.09	0.15	0.26	0.46	0.77	1.36	2.27
Cushioning pad	0.043	0.075	0.11	0.18	0.29	0.52	0.91	1.54	2.71	4.54

Allowable lateral load at rod end

Without auto switch

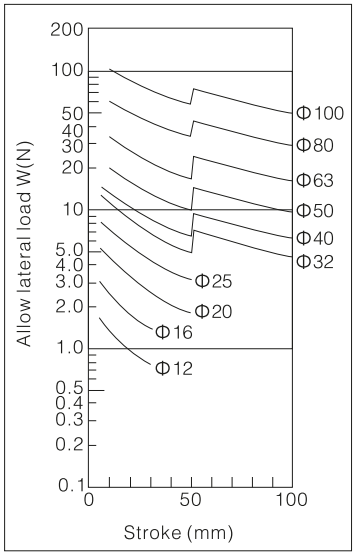

With auto switch

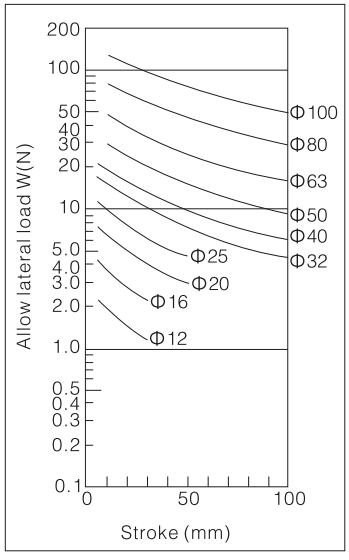

Dimensions

Through-hole Installation/CQ2B

Φ12~Φ25

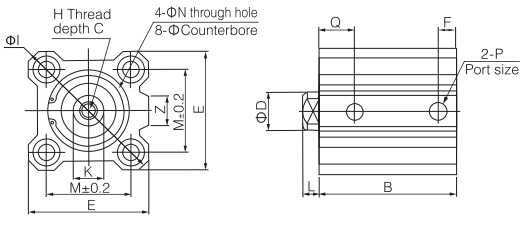

Φ32~Φ100

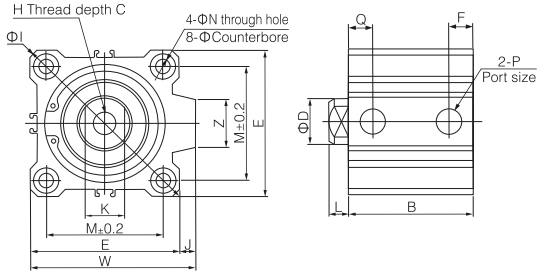

Double acting cylinder size table

Model	Stroke range(mm) Note 1)	B	ΦD	E	F	H	C	ΦI	J	K	L	M	ΦN	ΦO	P	Q	W	Z
NCQ2B12-□D	5~30	17	6	25	5	M3×0.5	6	32	-	5	3.5	15.5	3.5	6.5 deep 3.5	M5×0.8	7.5	-	-
NCQ2B16-□D	5~30	18.5	8	29	5.5	M4×0.7	8	38	-	6	3.5	20	3.5	6.5 deep 3.5	M5×0.8	8	-	10
NCQ2B20-□D	5~50	19.5	10	36	5.5	M3×0.5	7	47	-	8	4.5	25.5	5.5	9 deep 7	M5×0.8	9	-	10
NCQ2B25-□D	5~50	22.5	12	40	5.5	M6×1.0	12	52	-	10	5	28	5.5	9 deep 7	M5×0.8	11	-	10
NCQ2B32-□D	5	23	16	45	5.5	M8×1.25	13	60	4.5	14	7	34	5.5	9 deep 7	M5×0.8	11.5	49.5	14
	10~50				7.5										1/8"	10.5		
NCQ2B40-□D	5~50	29.5	16	52	8	M8×1.25	13	69	5	14	7	40	5.5	9 deep 7	1/8"	11	57	14
NCQ2B50-□D	10~50	30.5	20	64	10.5	M10×1.5	15	86	7	17	8	50	6.6	11 deep 8	1/4"	10.5	71	19
NCQ2B63-□D	10~50	36	20	77	10.5	M10×1.5	15	103	7	17	8	60	9	14 deep 10.5	1/4"	15	84	19
NCQ2B80-□D	10~50	43.5	25	98	12.5	M16×2.0	21	132	6	22	10	77	11	17.5 deep 13.5	3/8"	16	104	26
NCQ2B100-□D	10~50	53	30	117	13	M20×2.5	27	156	6.5	27	12	94	11	17.5 deep 13.5	3/8"	23	123.5	26

Long stroke Note 2)

Model	Stroke (mm)	B	F	P	Q
32	75,100	33	7.5	1/8"	10.5
40	75,100	39.5	8	1/8"	11
50	75,100	40.5	10.5	1/4"	10.5
63	75,100	46	10.5	1/4"	15
80	75,100	53.5	12.5	3/8"	16
100	75,100	63	13	3/8"	23

Note: 1. Standard stroke is 5 mm apart
2. Intermediate stroke (55, 60, 65, 70, 80, 85, 90, 95) between 55mm and 100mm plus 5, 10, 15 or 20mm thick pads.
3. Unless other specified, the dimensions of through-hole cylinders are the same as those of screw-hole cylinders at both ends.

Size table of single-acting cylinder

St= stroke

Model	B			ΦD	E	F		H	C	ΦI	J	K	L	M	ΦN	ΦO	P			Q		W	Z
	5st	10st	20st			5st	10st										5st	10st	20st	5st	10st		
NCQ2B12-□S	22	27	-	6	25	5	5	M3×0.5	6	32	-	5	3.5	15.5	3.5	6.5deep3.5	M5×0.8		-	7.5	7.5	-	-
NCQ2B16-□S	23.5	28.5	-	8	29	5.5	5.5	M4×0.7	8	38	-	6	3.5	20	3.5	6.5deep3.5	M5×0.8		-	8	8	-	10
NCQ2B20-□S	24.5	29.5	-	10	36	5.5	5.5	M5×0.8	7	47	-	8	4.5	25.5	5.5	9 deep 7	M5×0.8		-	9	9	-	10
NCQ2B25-□S	27.5	32.5	-	12	40	5.5	5.5	M6×1.0	12	52	-	10	5	28	5.5	9 deep 7	M5×0.8		-	11	11	-	10
NCQ2B32-□S	28	33	-	16	45	5.5	7.5	M8×1.25	13	60	4.5	14	7	34	5.5	9 deep 7	M5×0.8	1/8"	-	11.5	10.5	49.5	18
NCQ2B40-□S	34.5	39.5	-	16	52	8	8	M8×1.25	13	69	5	14	7	40	5.5	9 deep 7	1/8"		-	11	11	57	18
NCQ2B50-□S	-	40.5	50.5	20	64	10.5	10.5	M10×1.5	15	86	7	17	8	50	6.6	11 deep 8	-	1/4		10.5	10.5	71	22

Piston rod external thread

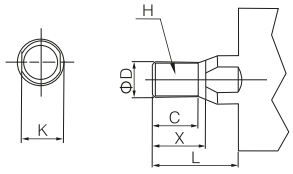

Bore size(mm)	C	X	ΦD	H	L	K
12	9	10.5	6	M5×0.8	14	5
16	10	12	8	M6×1.0	15.5	6
20	12	14	10	M8×1.25	18.5	8
25	15	17.5	12	M10×1.25	22.5	10
32	20.5	23.5	16	M14×1.5	28.5	14
40	20.5	23.5	16	M14×1.5	28.5	14
50	26	28.5	20	M18×1.5	33.5	17
63	26	28.5	20	M18×1.5	33.5	17
80	32.5	35.5	25	M22×1.5	43.5	22
100	32.5	35.5	30	M26×1.5	43.5	27

Two end screw hole installation type/CQ2A

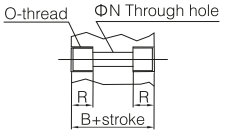

Bore size(mm)	O	R
12	M4×0.7	7
16	M4×0.7	7
20	M6×1.0	10
25	M6×1.0	10
32	M6×1.0	10
40	M6×1.0	10
50	M8×1.25	14
63	M10×1.5	18
80	M12×1.75	22
100	M12×1.15	22

Single action/Spring extrusion

Φ12~Φ50

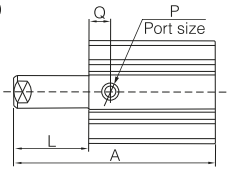

Bore size (mm)	A			L		
	5st	10st	20st	5st	10st	20st
12	30.5	40.5	-	8.5	13.5	-
16	32	42	-	8.5	13.5	-
20	34	44	-	9.5	14.5	-
25	37.5	47.5	-	10	15	-
32	40	50	-	12	17	-
40	46.5	56.5	-	12	17	-
50	-	58.5	78.5	-	18	28

Note: Unless other specified, the size of through-hole cylinders is same as that of screw-hole cylinders at both ends.

Dimensions

CDQ2B

Φ12~Φ25

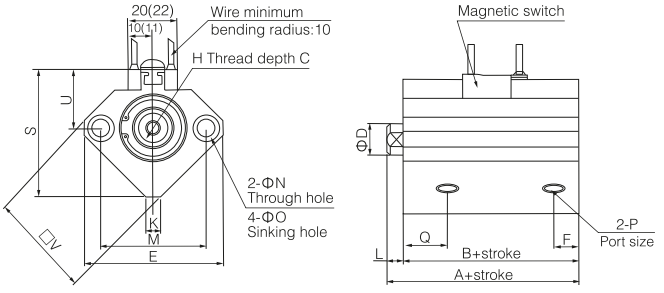

Φ32~Φ100

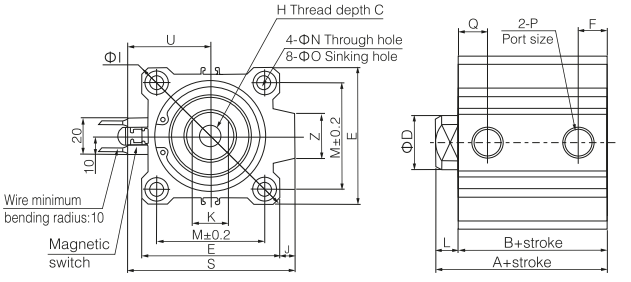

Model	Stroke range(mm) Note 1)	A	B	ΦD	E	F	H	C	ΦI	J	K	L	M	ΦN	ΦO	P	Q	S	U	V	Z
NCDQ2B12	5~30	31.5	28	6	32	6.5	M3×0.5	6	-	-	5	3.5	22	3.5	6.5 deep 3.5	M5×0.8	11	35.5	19.5	25	-
NCDQ2B16	5~30	34	30.5	8	38	5.5	M4×0.7	8	-	-	6	3.5	28	3.5	6.5 deep 3.5	M5×0.8	10	41.5	22.5	29	-
NCDQ2B20	5~50	36	31.5	10	46.8	5.5	M5×0.8	7	-	-	8	4.5	36	5.5	9 deep 7	M5×0.8	10.5	48	24.5	36	-
NCDQ2B25	5~50	37.5	32.5	12	52	5.5	M6×1.0	12	-	-	10	5	40	5.5	9 deep 7	M5×0.8	11	53.5	27.5	40	-
NCDQ2B32	5~50	40	33	16	45	7.5	M8×1.25	13	60	4.5	14	7	34	5.5	9 deep 7	1/8"	10.5	58.5	31.5	-	18
NCDQ2B40	5~50	46.5	39.5	16	52	8	M8×1.25	13	69	5	14	7	40	5.5	9 deep 7	1/8"	11	66	35	-	18
NCDQ2B50	10~50	48.5	40.5	20	64	10.5	M10×1.5	15	86	7	17	8	50	6.6	11 deep 8	1/4"	10.5	80	41	-	22
NCDQ2B63	10~50	54	46	20	77	10.5	M10×1.5	15	103	7	17	8	60	9	14 deep 10.5	1/4"	15	93	47.5	-	22
NCDQ2B80	10~50	63.5	53.5	25	98	12.5	M16×2.0	21	132	6	22	10	77	11	17.5 deep 13.5	3/8"	16	112.5	57.5	-	26
NCDQ2B100	10~50	75	63	30	117	13	M20×2.5	27	156	6.5	27	12	94	11	17.5 deep 13.5	3/8"	23	132.5	67.5	-	26

Long stroke Note 2)

Model	stroke(mm)	A	B	F	P	Q
32	75,100	40	33	7.5	1/8"	10.5
40	75,100	46.5	39.5	8	1/8"	11
50	75,100	48.5	40.5	10.5	1/4"	10.5
63	75,100	54	46	10.5	1/4"	15
80	75,100	63.5	53.5	12.5	3/8"	16
100	75,100	75	63	13	3/8"	23

Note: 1. Standard stroke is 5 mm apart.
2. Intermediate stroke (55, 60, 65, 70, 80, 85, 90, 95) between 55mm and 100mm plus 5, 10, 15 or 20mm thick pads.
3. Unless other specified, the dimensions of through-hole cylinders are the same as those of screw-hole cylinders at both ends.
4. Only one magnetic switch can be installed in a 5 mm stroke cylinder.

Screw holes at both ends: CDQ2A Note 3)

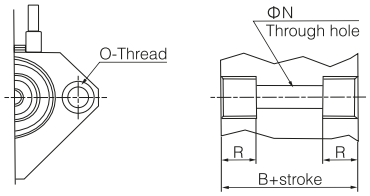

Bore size(mm)	O	R
12	M4×0.7	7
16	M4×0.7	7
20	M6×1.0	10
25	M6×1.0	10
32	M6×1.0	10
40	M6×1.0	10
50	M8×1.25	14
63	M10×1.5	18
80	M12×1.75	22
100	M12×1.75	22

External threads at rod end

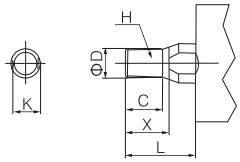

Bore size(mm)	C	X	ΦD	H	L	K
12	9	10.5	6	M5×0.8	14	5
16	10	12	6	M6×1.0	15.5	6
20	12	14	10	M8×1.25	18.5	8
25	15	17.5	12	M10×1.25	22.5	10
32	20.5	23.5	16	M14×1.5	28.5	14
40	20.5	23.5	16	M14×1.5	28.5	14
50	26	28.5	20	M18×1.5	33.5	17
63	26	28.5	20	M18×1.5	33.5	17
80	32.5	35.5	25	M22×1.5	43.5	22
100	32.5	35.5	30	M26×1.5	43.5	27

I Type single toggle joint

I-G012, I-Z015A
I-G012, I-G03A

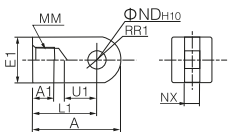

I-G04, I-G05
I-G08, I-G10

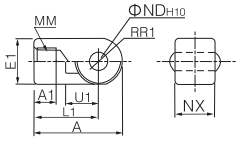

Y Type double toggle joint

Y-G012, Y-Z015A
AY-G02, Y-G03

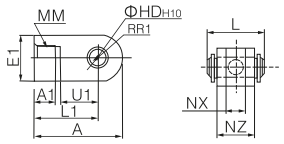

Y-G04, Y-G05
Y-G08, Y-G10

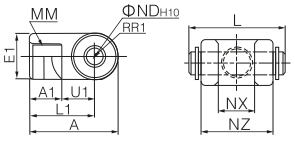

Applicable bore size (mm)	I Type single toggle joint										Y Type double toggle joint											
	Part No.	A	A1	E1	L1	MM	RR1	U1	ND_{H10}	NX	Part No.	A	A1	E1	L1	MM	RR1	U1	$ΦND_{H10}$	NX	NZ	L
12	I-G012	21.5	6	□10	16	M5×0.8	6.3	7	$5^{+0.048}_{0}$	$5^{-0.2}_{-0.4}$	Y-G012	21.5	6	□10	16	M5×0.8	6.3	7	$5^{+0.048}_{0}$	$5^{+0.4}_{+0.2}$	10	14.6
16	I-Z015A	32	8	□12	25	M6×1	8.1	14	$5^{+0.048}_{0}$	$6.4^{-0.1}_{-0.3}$	Y-Z015A	28	11	□12	21	M6×1	8.1	10	$5^{+0.048}_{0}$	$6.5^{+0.4}_{+0.2}$	12	16.6
20	I-G02	34	8.5	□16	25	M8×1.25	10.3	11.5	$8^{+0.058}_{0}$	$8^{-0.2}_{-0.4}$	Y-G02	34	8.5	□16	25	M8×1.25	10.3	11.5	$8^{+0.058}_{0}$	$8^{+0.4}_{+0.2}$	16	21
25	I-G03	41	10.5	□20	30	M10×1.25	12.8	14	$10^{+0.058}_{0}$	$10^{-0.2}_{-0.4}$	Y-G03	41	10.5	□20	30	M10×1.25	12.8	14	$10^{+0.058}_{0}$	$10^{+0.4}_{+0.2}$	20	25.6
32,40	I-G04	42	14	Φ22	30	M14×1.5	12	14	$10^{+0.058}_{0}$	$18^{-0.3}_{-0.5}$	Y-G04	42	16	Φ22	30	M14×1.5	12	14	$10^{+0.058}_{0}$	$18^{+0.5}_{+0.3}$	36	41.6
50,63	I-G05	56	18	Φ28	40	M18×1.5	16	20	$14^{+0.070}_{0}$	$22^{-0.3}_{-0.5}$	Y-G05	56	20	Φ28	40	M18×1.5	16	20	$14^{+0.070}_{0}$	$22^{+0.5}_{+0.3}$	44	50.6
80	I-G08	71	21	Φ38	50	M22×1.5	21	27	$18^{+0.070}_{0}$	$28^{-0.3}_{-0.5}$	Y-G08	71	23	Φ38	50	M22×1.5	21	27	$18^{+0.070}_{0}$	$28^{+0.5}_{+0.3}$	56	64
100	I-G10	79	21	Φ44	55	M26×1.5	24	31	$22^{+0.084}_{0}$	$32^{-0.3}_{-0.5}$	Y-G10	79	24	Φ44	55	M26×1.5	24	31	$22^{+0.084}_{0}$	$32^{+0.5}_{+0.3}$	64	72

Toggle joint pins

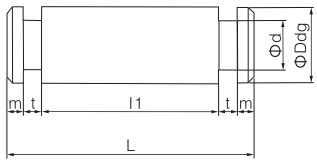

Applicable bore size (mm)	Toggle joint pins						
	Part No.	ΦDdg	L	Φd	l	m	t
12	IY-G012	$5^{-0.030}_{-0.060}$	14.6	4.8	10.2	1.5	0.7
16	IY-J015	$5^{-0.030}_{-0.060}$	16.6	4.8	12.2	1.5	0.7
20	IY-G02	$8^{-0.040}_{-0.076}$	21	7.6	16.2	1.5	0.9
25	IY-G03	$10^{-0.040}_{-0.076}$	25.6	9.6	20.2	1.55	1.15
30, 40	IY-G04	$10^{-0.040}_{-0.076}$	41.6	9.6	36.3	1.55	1.15
50, 63	IY-G05	$14^{-0.050}_{-0.093}$	50.6	13.4	44.2	2.05	1.15
80	IY-G08	$18^{-0.050}_{-0.093}$	64	17	56.2	2.55	1.35
100	IY-G10	$22^{-0.065}_{-0.117}$	72	21	64.2	2.55	1.35

Cylinder
SC
SC(Big)
SCT
SCF
SU
SUF
SI
SIF
DNC
QGB
QGBZ
NCQ2
NCQ2(Big)
NCQ2(Long)
NCQS
NCQM
NRQ
SDA
ADVU
ACE(AND)
MAL
MA
MI
NCM2
NCJ2
NCG1
NCJP
TD
TN(TDA)
NCXS
NCXSW
NMGP
NMGG
NCU
NCUJ
NCY3B
NCY3R
NCY1S
NCY1L
STM
NMXH
NMXS
NMXQ
NMHZ2
NMHC2
NMHL2
NMHY2
NMHT2
NMHW2
NMHF2
NMHS2
NMHS3
NMHS4
NMRHQ
NMSQ
NCRA1
NCRQ2
NCRB2
ACK
SRC
QCK
NCK1

Specifications

Bore size(mm)	125	140	160	180	200
Use fluid	Air (to be filtered by 40μm filter element)				
Action mode	Double action				
Maximum operating pressure	1.0MPa		0.7MPa		
Minimum operating pressure	0.05MPa				
Ambient and fluid temperature	Without auto switch: -10 to 70℃ (No freezing) With auto switch: -10 to 60℃ (No freezing)				
Rod end thread	Internal thread (standard), external thread (optional)				
Use piston speed	Standard rubber buffer				
Cushion	50~500mm/s		20~400mm/s		
Stroke tolerance (mm)	$^{+1.4}_{0}$				
Lubrication	Don't need				
Installation form	Through hole and screw hole at both ends (common)				
Pipe size	3/8"		1/2"		

Note: If oil is supplied, please use turbine No.1 oil ISOVG32.

Symbol

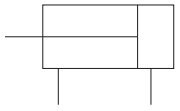

Ordering code

N C D Q2 □ B 125 – 30 D C □ – A73 □

Built in magnetic ring

Blank	No built-in magnetic ring
D	Built-in magnet ring

Piston rod form

Blank	Single rod
W	Double rod

Installation form

Through holes and screw holes at both ends can be used.

Bore size

125	125mm
140	140mm
160	160mm
180	180mm
200	200mm

Stroke

See the right table

Double action

Rubber cushion

Options

Blank	Standard (rod end internal thread)
M	Rod end male thread

Magnetic switch type

Blank	Without magnetic switch

* Refer to tour/magnetic switch model list for magnetic switch model
* No built-in magnetic ring cylinder no such item

Number of magnetic switches

Blank	2 pcs.
S	1 pc.
n	"n" pcs.

Stroke/magnetic switch type table

Bore size (mm)	Standard stroke (mm)	*Magnetic switch type		
		Two wire contact control	Two wire contactless control	Three wire NPN
125	10, 20, 30, 40, 50,75, 100, 125, 150,175, 200, 250, 300	3C-D-A93(V)L	O-M9B (V)L	D-M9N (V)L
140				
160				
180				
200				

* The specifications and characteristics of magnetic switches can be referred to the series of magnetic switches.
* Wire Length Representation Mark: Unmarked-0.5m, L-3m, Z-5m
Example: A73, A73L.

Dimensions

NCQ2B/NCDQ2B

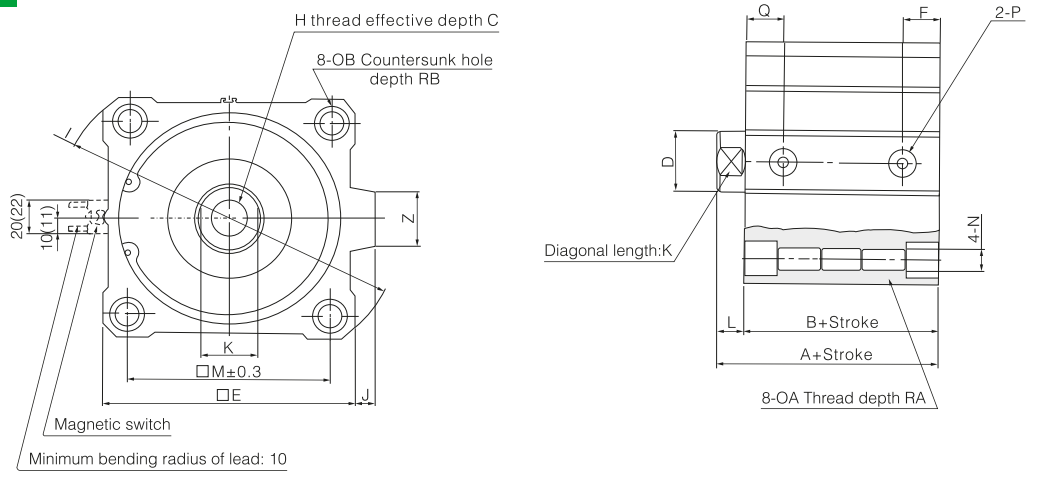

Bore size(mm)	Standard stroke	A	B	C	D	E	F	H	I	J	K	L	M	N	OA	OB	P	Q	RA	RB	Z
125	10,20,30,40,50, 75,100,125,150, 175,200,250,300	99	83	30	36	142	24.5	M22×2.5	190	11	32	16	114	12.5	M14×2	21.2	3/8"	24.5	25	18.4	32
140		99	83	30	36	158	24.5	M22×2.5	210	10	32	16	128	12.5	M14×2	21.2	3/8"	24.5	25	18.4	32
160		108	91	33	40	178	27.5	M24×3	238	10	36	17	144	14.5	M16×2	24.2	3/8"	27.5	28	21.2	32

Note: If through hole is used for installation, the attached washer must be used.

NCQ2B/NCDQ2B

External threads at rod end

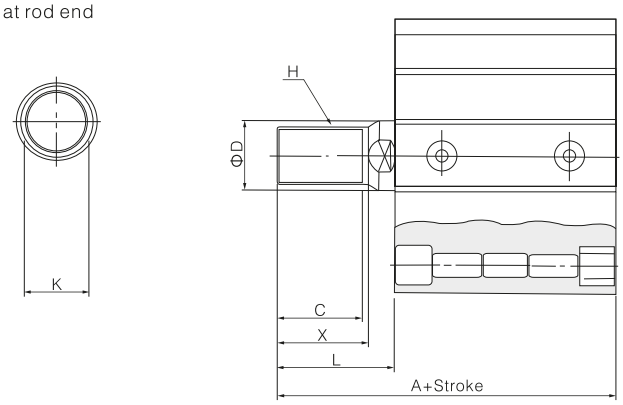

External threads at rod end

Bore size(mm)	A	C	ΦD	H	K	L	X
125	141	42	36	M30×1.5	32	58	45
140	141	42	36	M30×1.5	32	58	45
160	155	47	40	M36×1.5	36	64	50

Φ180

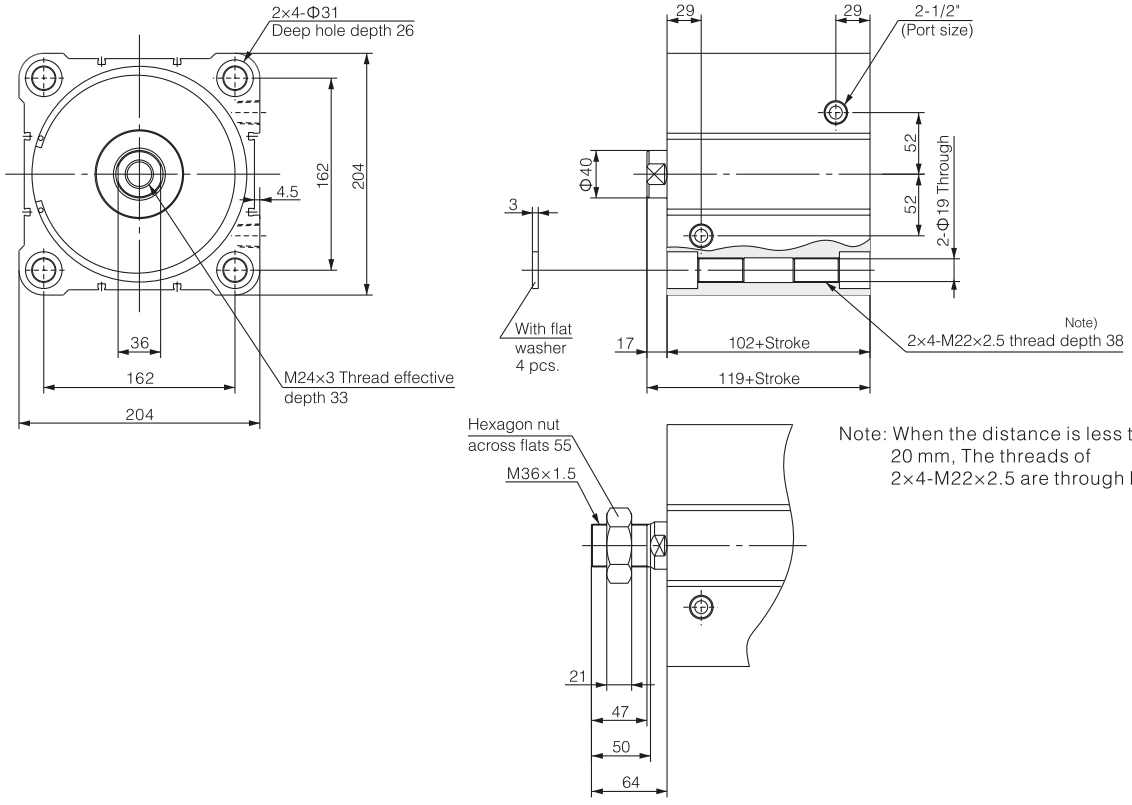

Note: When the distance is less than 20 mm, The threads of 2×4-M22×2.5 are through holes.

Φ200

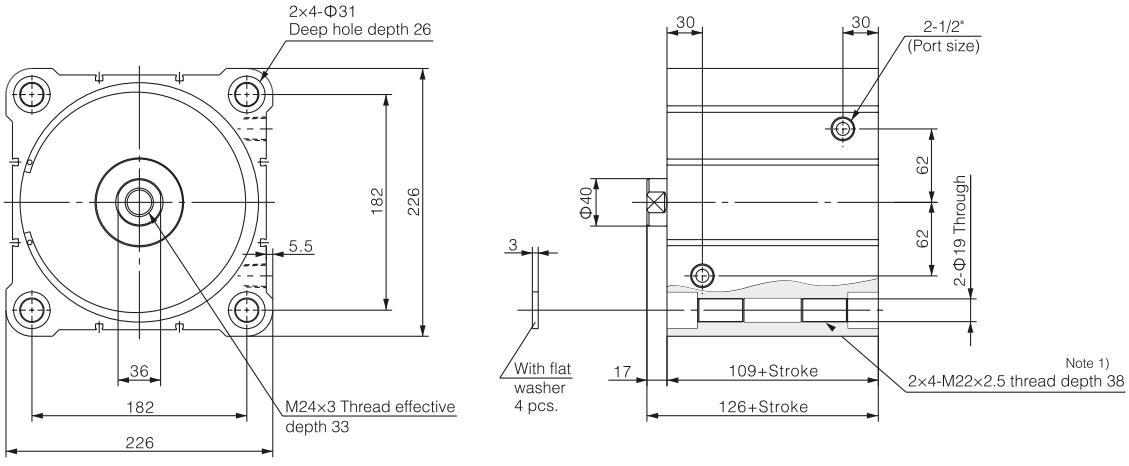

Cylinder
SC
SC(Big)
SCT
SCF
SU
SUF
SI
SIF
DNC
QGB
QGBZ
NCQ2
NCQ2(Big)
NCQ2(Long)
NCQS
NCQM
NRQ
SDA
ADVU
ACE(AND)
MAL
MA
MI
NCM2
NCJ2
NCG1
NCJP
TD
TN(TDA)
NCXS
NCXSW
NMGP
NMGG
NCU
NCUJ
NCY3B
NCY3R
NCY1S
NCY1L
STM
NMXH
NMXS
NMXQ
NMHZ2
NMHC2
NMHL2
NMHY2
NMHT2
NMHW2
NMHF2
NMHS2
NMHS3
NMHS4
NMRHQ
NMSQ
NCRA1
NCRQ2
NCRB2
ACK
SRC
QCK
NCK1

Cylinder
SC
SC(Big)
SCT
SCF
SU
SUF
SI
SIF
DNC
QGB
QGBZ
NCQ2
NCQ2(Big)
NCQ2(Long)
NCQS
NCQM
NRQ
SDA
ADVU
ACE(AND)
MAL
MA
MI
NCM2
NCJ2
NCG1
NCJP
TD
TN(TDA)
NCXS
NCXSW
NMGP
NMGG
NCU
NCUJ
NCY3B
NCY3R
NCY1S
NCY1L
STM
NMXH
NMXS
NMXQ
NMHZ2
NMHC2
NMHL2
NMHY2
NMHT2
NMHW2
NMHF2
NMHS2
NMHS3
NMHS4
NMRHQ
NMSQ
NCRA1
NCRQ2
NCRB2
ACK
SRC
QCK
NCK1

Specifications

Bore size(mm)	32	40	50	63	80	100
Use fluid	Air (to be filtered by 40μm filter element)					
Action mode	Double acting					
Proof pressure	1.5MPa					
Maximum operating pressure	1.0MPa					
Minimum operating pressure	0.05MPa					
Ambient and fluid temperature	Without auto switch: -10 to 70℃ (No freezing) With auto switch: -10 to 60℃ (No freezing)					
Rod end thread	Internal thread (standard), external thread (optional)					
Use piston speed	50~500mm/s					
Cushion	Standard rubber buffer					
Stroke tolerance (mm)	$^{+1.4}_{0}$					
Lubrication	Don't need					
Installation form	Screw holes at both ends (standard)					
Pipe size	1/8"		1/4"		3/8"	

Note: If oil is supplied, please use turbine No.1 oil ISOVG32.

Symbol

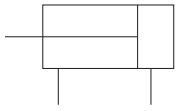

Ordering code

N C D Q2 A 32 □ – 200 D C □ – A73 □

Built in magnetic ring

Blank	No built-in magnetic ring
D	Built-in magnet ring

Installation form

A	Both ends tapped
F	Rod flange
G	Head flange
L	Foot type
D	Double clevis

Piping mode

Blank	Thread piping
F*	Built-in quick joint

* Only phi Φ32~Φ63

Bore size

32	32mm
40	40mm
50	50mm
63	63mm
80	80mm
100	100mm

Stroke

See the right table

Rubber cushion

Double action

Options

Blank	Standard (rod end internal thread)
M	Rod end male thread

Magnetic switch type

Blank	Without magnetic switch

* Refer to tour/magnetic switch model list for magnetic switch model
* No built-in magnetic ring cylinder no such item

Number of magnetic switches

Blank	2 pcs.
S	1 pc.
n	"n" pcs.

Stroke/magnetic switch type table

Bore size (mm)	Standard stroke (mm)	*Magnetic switch type		
		Two wire contact control	Two wire contactless control	Three wire NPN
32	125, 150 175, 200 250, 300	3C-D-A93(V)L	O-M9B (V)L	D-M9N (V)L
40				
50				
63				
80				
100				

* The specifications and characteristics of magnetic switches can be referred to the series of magnetic switches.
The type of installation is BQ-2.
* The length of conductor is denoted as mark: no mark - 0.5m, L - 3m. Example: A73, A73L.

Dimensions

Rod end female thread NCQ2A/NCDQ2A

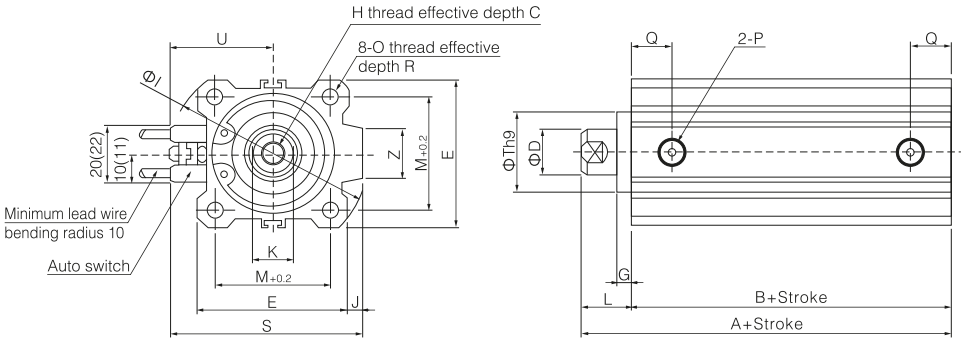

Rod end male thread

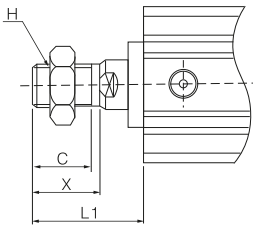

( ) The dimensions of magnetic switches other than D-A7 are in parentheses.

Bore size (mm)	Stroke (mm)	Rod end female thread																				Rod end male thread			
		A	B	C	D	E	G	H	I	J	K	L	M	O	P	Q	R	S	Th9	U	Z	C	H	L1	X
32	125, 150 175, 200 250, 300	62.5	45.5	13	16	45	5	M8×1.25	60	4.5	14	17	34	M6×1.0	1/8"	12.5	10	58.5	$22^{0}_{-0.052}$	31.5	14	20.5	M14×1.5	38.5	23.5
40		72	55	13	16	52	5	M8×1.25	69	5	14	17	40	M6×1.0	1/8"	14	10	66	$28^{0}_{-0.052}$	35	14	20.5	M14×1.5	38.5	23.5
50		73.5	55.5	15	20	64	5	M10×1.5	86	7	17	18	50	M8×1.25	1/4"	14	14	80	$35^{0}_{-0.062}$	41	19	26	M18×1.5	43.5	28.5
53		75	57	15	20	77	5	M10×1.5	103	7	17	18	60	M10×1.5	1/4"	16.5	18	93	$35^{0}_{-0.062}$	47.5	19	26	M18×1.5	43.5	28.5
80		86	66	21	25	98	5	M16×2.0	132	6	22	20	77	M12×1.75	3/8"	19	22	112.5	$43^{0}_{-0.062}$	57.5	26	32.5	M22×1.5	53.5	35.5
100		97.5	75.5	27	30	117	5	M20×2.5	156	6.5	27	22	94	M12×1.75	3/8"	23	22	132.5	$59^{0}_{-0.074}$	67.5	26	32.5	M26×1.5	53.5	35.5

Specifications

Bore size(mm)	12	16	20	25
Use fluid	Air (to be filtered by 40μm filter element)			
Action mode	Double acting, Single action: spring press back/spring press out			
Maximum operating pressure	1.0MPa			
Minimum operating pressure	0.07MPa		0.05MPa	
Ambient and fluid temperature	Without auto switch: -10 to 70℃ (No freezing) With auto switch: -10 to 60℃ (No freezing)			
Rod end thread	Internal thread (standard), external thread (optional)			
Buffer	Without			
Stroke tolerance (mm)	$^{+1.0}_{0}$			
Cushion	Don't need			
Use piston speed	50~500mm/s			
Pipe size	M5×0.8			

Note: If oil is supplied, please use turbine No.1 oil ISOVG32.

Symbol

Double action

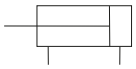

Single action

Spring press back

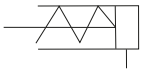

Spring press out

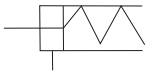

Ordering code

N C D QS B 20 – 30 D □ – M9N □

Built in magnetic ring

Blank	No built-in magnetic ring
D	Built-in magnet ring

Installation form

B	Through-hole Both ends tapped common (Standard)
L	Foot type
F	Rod side flange type
G	Head side flange type
D	Double clevis type

Bore size

32	32mm
40	40mm
50	50mm
63	63mm
80	80mm
100	100mm

Stroke

See the right table

Action

D	Double action
S	Single action(Spring press out)
T	Single action(Spring press back)

Options

Blank	Standard (rod end internal thread)
M	Rod end male thread

Magnetic switch type

Blank	Without magnetic switch

* Refer to tour/magnetic switch model list
* No built-in magnetic ring cylinder no such item

Number of magnetic switches

Blank	2 pcs.
S	1 pc.
n	"n" pcs.

Stroke/magnetic switch type table

Bore size (mm)	Standard stroke (mm)		*Magnetic switch type (Track installation)
	Double action Note)	Single action	
12, 16	5, 10, 15, 20, 25, 30	5, 10	M9N M9B M9P
20, 25	5, 10, 15, 20, 25, 30, 35, 40, 45, 50		

* The specifications and characteristics of magnetic switches can be referred to the series of magnetic switches. (Note: With long stroke)
* Wire length representation mark: Unmarked -0.5m, L-3m, Z-5m
Example: M9N, M9NL.

Characteristic

Easy installation

Sharing of through holes and screw holes at both ends

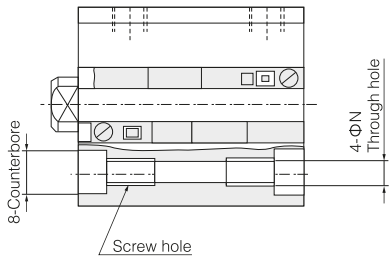

Save space

The miniature magnetic switch is installed in the cylinder groove and will not expose the outside of the cylinder block.

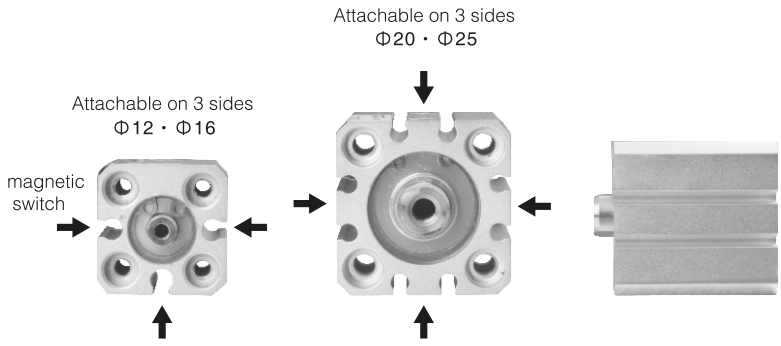

Position installation of magnetic switch can be selected from many sides
(Φ12・Φ16: 3 sides, Φ20・Φ25: 4 sides)

Cylinder
SC
SC(Big)
SCT
SCF
SU
SUF
SI
SIF
DNC
QGB
QGBZ
NCQ2
NCQ2(Big)
NCQ2(Long)
NCQS
NCQM
NRQ
SDA
ADVU
ACE(AND)
MAL
MA
MI
NCM2
NCJ2
NCG1
NCJP
TD
TN(TDA)
NCXS
NCXSW
NMGP
NMGG
NCU
NCUJ
NCY3B
NCY3R
NCY1S
NCY1L
STM
NMXH
NMXS
NMXQ
NMHZ2
NMHC2
NMHL2
NMHY2
NMHT2
NMHW2
NMHF2
NMHS2
NMHS3
NMHS4
NMRHQ
NMSQ
NCRA1
NCRQ2
NCRB2
ACK
SRC
QCK
NCK1

Cylinder
SC
SC(Big)
SCT
SCF
SU
SUF
SI
SIF
DNC
QGB
QGBZ
NCQ2
NCQ2(Big)
NCQ2(Long)
NCQS
NCQM
NRQ
SDA
ADVU
ACE(AND)
MAL
MA
MI
NCM2
NCJ2
NCG1
NCJP
TD
TN(TDA)
NCXS
NCXSW
NMGP
NMGG
NCU
NCUJ
NCY3B
NCY3R
NCY1S
NCY1L
STM
NMXH
NMXS
NMXQ
NMHZ2
NMHC2
NMHL2
NMHY2
NMHT2
NMHW2
NMHF2
NMHS2
NMHS3
NMHS4
NMRHQ
NMSQ
NCRA1
NCRQ2
NCRB2
ACK
SRC
QCK
NCK1

Dimensions

Through hole and screw hole sharing at both ends (Double action, Single action: Spring press back/Spring press out)
NCQSB/NCDQSB

Φ12

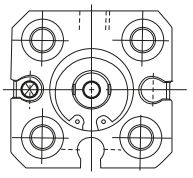

Φ20 · Φ25

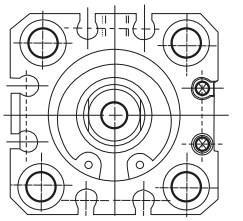

Φ16 Double action/Single action: Spring pressure back

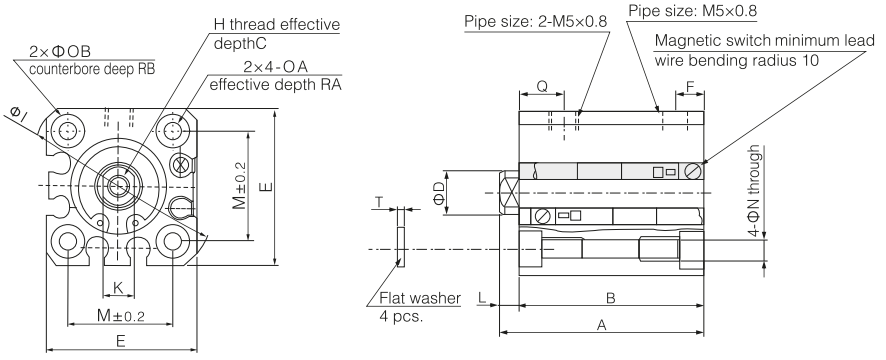

Φ16 Single action(Spring press out)

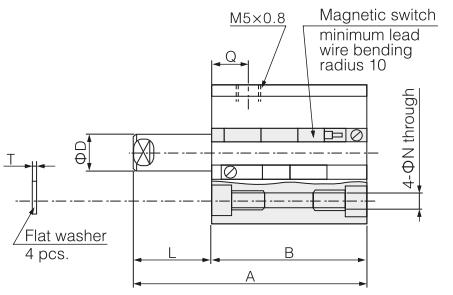

External threads at rod end (double action/single action: spring back)

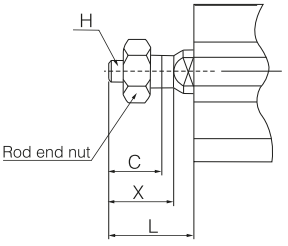

Bore size (mm)	C	H	L	X
12	9	M5×0.8	14	10.5
16	10	M6×1.0	15.5	12
20	12	M8×1.25	18.5	14
25	15	M10×1.25	22.5	17.5

External threads at rod end (single action: spring extrusion)

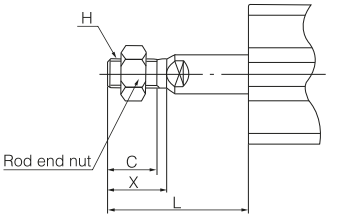

Bore size (mm)	C	H	L		X
			5ST	10ST	
12	9	M5×0.8	19	24	10.5
16	10	M6×1.0	20.5	25.5	12
20	12	M8×1.25	23.5	28.5	14
25	15	M10×1.25	27.5	32.5	17.5

Dual-acting and single-acting shared size table

Bore size (mm)	Basic type													
	C	D	E	H	I	K	M	N	OA	OB	RA	RB	T	Q
12	6	6	25	M3×0.5	32	5	15.5	3.5	M4×0.7	6.5	7	4	0.5	7.5
16	8	8	29	M4×0.7	38	6	20	3.5	M4×0.7	6.5	7	4	0.5	7.5
20	7	10	36	M5×0.8	47	8	25.5	5.4	M6×1.0	9	10	7	1	9
25	12	12	40	M6×1.0	52	10	28	5.4	M6×1.0	9	10	7	1	11

Double action

ST=Stroke

Bore size (mm)	Stroke range (mm)	Basic type					Built-in magnetic ring	
		A	B	F	L	Q	A	B
12	5~30	20.5+st	17+st	5	3.5	7.5	25.5+st	22+st
16	5~30	20.5+st	17+st	5	3.5	7.5	25.5+st	22+st
20	5~50	24+st	19.5+st	5.5	4.5	9	34+st	29.5+st
25	5~50	27.5+st	22.5+st	5.5	5	11	37.5+st	32.5+st

Single action: spring press back

ST=Stroke

Bore size (mm)	Stroke range (mm)	Basic type						Built-in magnetic ring			
		A		B		F	L	A		B	
		5ST	10ST	5ST	10ST			5ST	10ST	5ST	10ST
12	5, 10	25.5	30.5	22	27	5	3.5	30.5	35.5	27	32
16		25.5	30.5	22	27	5	3.5	30.5	35.5	27	32
20		29	34	24.5	29.5	5.5	4.5	39	44	34.5	39.5
25		32.5	37.5	27.5	32.5	5.5	5	42.5	47.5	37.5	42.5

Single action: spring extrusion

ST=Stroke

Bore size (mm)	Stroke range (mm)	Basic type							Built-in magnetic ring			
		A		B		L		Q	A		B	
		5ST	10ST	5ST	10ST	5ST	10ST		5ST	10ST	5ST	10ST
12	5, 10	30.5	40.5	22	27	8.5	13.5	7.5	35.5	45.5	27	32
16		30.5	40.5	22	27	8.5	13.5	7.5	35.5	45.5	27	32
20		34	39	24.5	29.5	9.5	14.5	9	44	49	34.5	39.5
25		37.5	42.5	27.5	32.5	10	15	11	47.5	52.5	37.5	42.5

Specifications

Action mode		Double acting, Single rod
Maximum operating pressure		1.0 MPa
Minimum operating pressure	Φ12~Φ16	0.12 MPa
	Φ20~Φ100	0.1 MPa
Ambient and fluid temperature		Without auto switch: -10 to 70℃ (No freezing) With auto switch: -10 to 60℃ (No freezing)
Buffer		Rubber bumper on both ends
Stroke tolerance (mm)		$^{+1.0}_{0}$
Use piston speed	Φ12~Φ40	50~500mm/s
	Φ50~Φ100	50~300mm/s

* Installation dimensions are interchangeable with NCQS and NCQ2 series.
* The accuracy of non-rotation is less than 0.2 degrees.
* Do not use as a stop.

Symbol

Rubber bumper

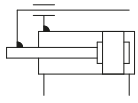

Ordering code

N C D QM B 20 – □ 10 – M9B S

Built in magnetic ring

Blank	No built-in magnetic ring
D	Built-in magnet ring

Installation form

B	Through-hole (Standard)
A	Both ends tapped (Φ32 to Φ100)

* The "A" of Φ12~Φ25 is also expressed as "B".

Bore size

12	12mm	40	40mm
16	16mm	50	50mm
20	20mm	63	63mm
25	25mm	80	80mm
32	32mm	100	100mm

Thread type

Blank	M thread	Φ12~Φ25
	Rc	Φ32~Φ100
TN	NPT	
TF	G	

Note: Φ32 without magnetic switch, when the stroke is 5 mm, is M thread.

Stroke

See the right table

Magnetic switch type

Blank	Without magnetic switch

* Refer to the right table for the type of magnetic switch.
* No built-in magnetic ring cylinder no such item

Number of magnetic switches

Blank	2 pcs.
S	1 pc.
n	"n" pcs.

Stroke/magnetic switch type table

Bore size (mm)	Standard stroke (mm)	*Magnetic switch type	
		Track installation	Direct installation
12, 16	5, 10, 15, 20, 25, 30	M9N M9B M9P	
20, 25	5, 10, 15, 20, 25, 30, 35, 40, 45, 50		
32, 40	5, 10, 15, 20, 25, 30, 35, 40, 45, 50, 75, 100		
50, 63 80, 100	10, 15, 20, 25, 30, 35, 40, 45, 50, 75, 100		

Dimensions

Φ12

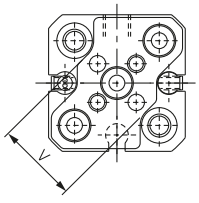

Φ16

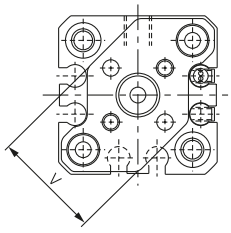

Φ20, Φ25

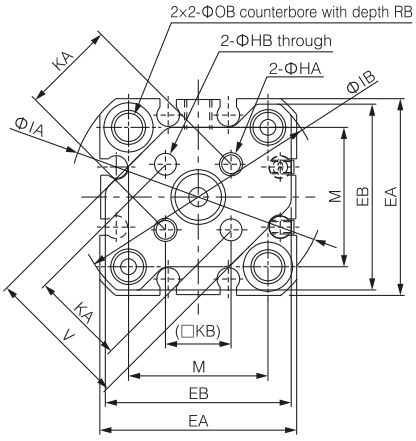

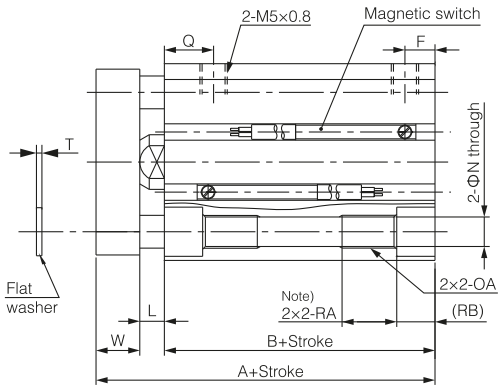

Bore size (mm)	Stroke range (mm)	Without auto switch		With auto switch		EA	EB	F	HA	OA	HB	IA	IB	KA	KB	L	M	N	OB	Q	RA	RB	T	V	W
		A	B	A	B																				
12	5~30	26.5	17	31.5	22	25	24	5	M3×0.5	M4×0.7	3	32	31.5	10	7.1	3.5	15.5	3.5	6.5	7.5	7	4	0.5	14.9	6
16	5~30	26.5	17	31.5	22	29	28	5	M3×0.5	M4×0.7	3	38	37	14	9.9	3.5	20	3.5	6.5	7.5	7	4	0.5	20	6
20	5~50	32	19.5	42	29.5	36	34	5.5	M4×0.7	M6×1.0	4	47	45.5	17	12	4.5	25.5	5.4	9	9	10	7	1	26	8
25	5~50	35.5	22.5	45.5	32.5	40	38	5.5	M5×0.8	M6×1.0	5	52	50.5	22	15.6	5	28	5.4	9	11	10	7	1	30	8

Note: Standard type without magnetic switch.
Φ12, Φ16: 5mm, Φ20: 5-15mm, Φ25: 5-10mm and magnetic switch ring built-in type are all through-hole threads.

Cylinder
SC
SC(Big)
SCT
SCF
SU
SUF
SI
SIF
DNC
QGB
QGBZ
NCQ2
NCQ2(Big)
NCQ2(Long)
NCQS
NCQM
NRQ
SDA
ADVU
ACE(AND)
MAL
MA
MI
NCM2
NCJ2
NCG1
NCJP
TD
TN(TDA)
NCXS
NCXSW
NMGP
NMGG
NCU
NCUJ
NCY3B
NCY3R
NCY1S
NCY1L
STM
NMXH
NMXS
NMXQ
NMHZ2
NMHC2
NMHL2
NMHY2
NMHT2
NMHW2
NMHF2
NMHS2
NMHS3
NMHS4
NMRHQ
NMSQ
NCRA1
NCRQ2
NCRB2
ACK
SRC
QCK
NCK1

Cylinder
SC
SC(Big)
SCT
SCF
SU
SUF
SI
SIF
DNC
QGB
QGBZ
NCQ2
NCQ2(Big)
NCQ2(Long)
NCQS
NCQM
NRQ
SDA
ADVU
ACE(AND)
MAL
MA
MI
NCM2
NCJ2
NCG1
NCJP
TD
TN(TDA)
NCXS
NCXSW
NMGP
NMGG
NCU
NCUJ
NCY3B
NCY3R
NCY1S
NCY1L
STM
NMXH
NMXS
NMXQ
NMHZ2
NMHC2
NMHL2
NMHY2
NMHT2
NMHW2
NMHF2
NMHS2
NMHS3
NMHS4
NMRHQ
NMSQ
NCRA1
NCRQ2
NCRB2
ACK
SRC
QCK
NCK1

Φ32~Φ50

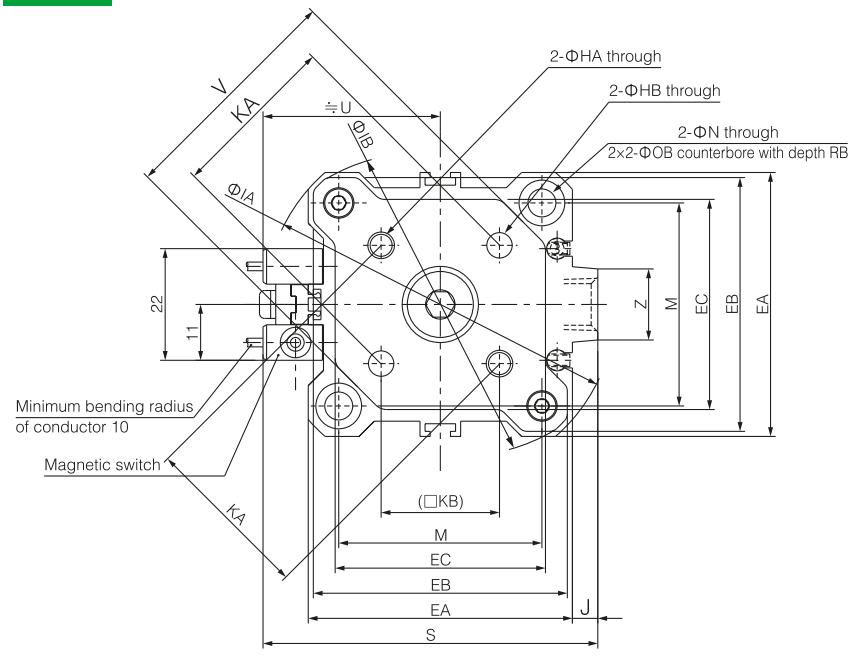

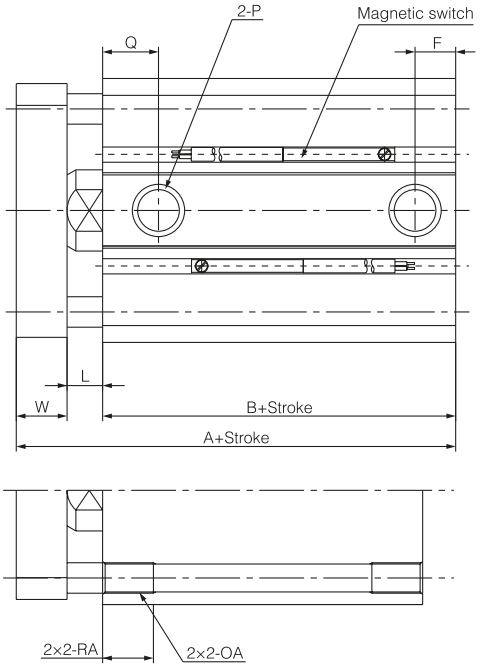

Φ63~Φ100

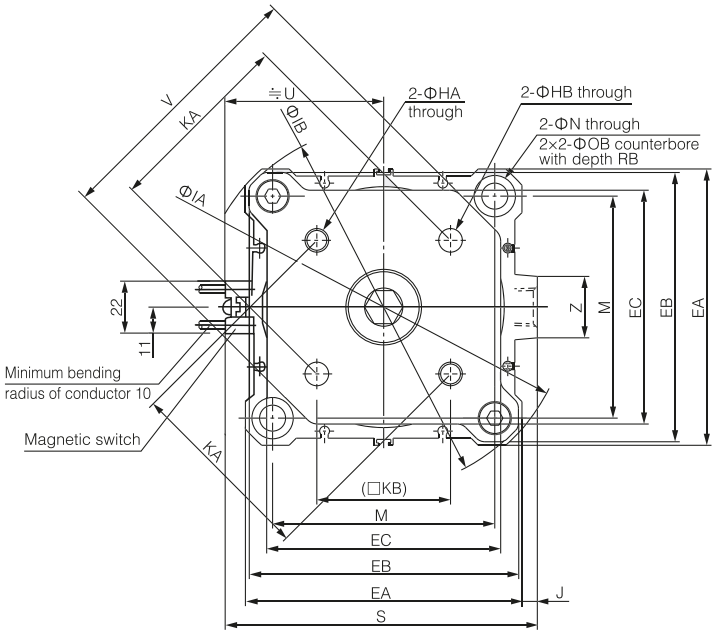

Two end screw hole (NCQMA)

Bore size (mm)	HA	OA	HB	IA	IB	J	KA
32	M5×0.8	M6×1.0	5	60	58.5	4.5	28
40	M5×0.8	M6×1.0	5	69	67.5	5	33
50	M6×1.0	M8×1.25	6	86	84.5	7	42
63	M6×1.0	M10×1.5	$6^{+0.2}_{0}$	103	100	7	$50^{+0.2}_{0}$
80	M8×1.25	M12×1.75	$8^{+0.2}_{0}$	132	129	6	$65^{+0.2}_{0}$
100	M10×1.5	M12×1.75	$10^{+0.2}_{0}$	156	153	6.5	$80^{+0.2}_{0}$

Bore size (mm)	KB	L	M	N	OB	RA	RB	S	U	V	W	Z
32	19.8	7	34	5.5	9	10	7	58.5	31.5	38	10	14
40	23.3	7	40	5.5	9	10	7	66	35	46	10	14
50	29.7	8	50	6.6	11	14	8	80	41	58	12	19
63	35.4	8	60	9	14	18	10.5	93	47.5	69	12	19
80	46	10	77	11	17.5	22	13.5	112.5	57.5	89	14	26
100	56.6	10	94	11	17.5	22	13.5	132.5	67.5	113	16	26

Bore size (mm)	Stroke range (mm)	Without auto switch							With auto switch							EA	EB	EC
		A	B	F	Q	P –	P TN	P TF	A	B	F	Q	P –	P TN	P TF			
32	5	40	23	5.5	11.5	M5×0.8	–	–	50	33	7.5	10.5	Rc1/8	NPT1/8	G1/8	45	43	34.4
	10~50			7.5	10.5	Rc1/8	NPT1/8	G1/8										
	75・100	50	33															
40	5~50	46.5	29.5	8	11	Rc1/8	NPT1/8	G1/8	56.5	39.5	8	11	Rc1/8	NPT1/8	G1/8	52	50	41.4
	75・100	56.5	39.5															
50	10~50	50.5	30.5	10.5	10.5	Rc1/4	NPT1/4	G1/4	60.5	40.5	10.5	10.5	Rc1/4	NPT1/4	G1/4	64	62	53.4
	75・100	60.5	40.5															
63	10~50	56	36	10.5	15	Rc1/4	NPT1/4	G1/4	66	46	10.5	15	Rc1/4	NPT1/4	G1/4	77	74	59.6
	75・100	66	46															
80	10~50	67.5	43.5	12.5	16	Rc3/8	NPT3/8	G3/8	77.5	53.5	12.5	16	Rc3/8	NPT3/8	G3/8	98	95	79.5
	75・100	77.5	53.5															
100	10~50	79	53	13	23	Rc3/8	NPT3/8	G3/8	89	63	13	23	Rc3/8	NPT3/8	G3/8	117	114	99
	75・100	89	63															

A new type of air cushion mechanism without cushion sleeve is designed. Compared with NCQ2 and NCQS, the total cylinder length increases by only a few millimeters, but the cushioning capacity increases by two times, and the repetition accuracy increases.

Specifications

Bore size(mm)	20	25	32, 40	50, 63	80, 100
Fluid	Air (to be filtered by 40μm filter element)				
Action mode	Single rod double action				
Use pressure range	0.05~1.0MPa				
Ambient and fluid temperature	Without auto switch: -10 to 70℃ (No freezing) With auto switch: -10 to 60℃ (No freezing)				
Rod end thread	Internal thread				
Stroke length tolerance (mm)	$^{+1.0}_{0}$				
Piston speed	50~500mm/s				
Installation form	Through hole, screw hole at both ends, pedestal type, flange type, double earring type				
Pipe size	M5×0.8		1/8"	1/4"	3/8"

Symbol

Air cushion

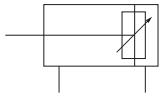

Ordering code

N R D Q B — 32 — □ — 50 □ — M9BV — □

Built in magnetic ring

Blank	No built-in magnetic ring
D	Built-in magnetic ring

Installation form

B	Through-hole (standard)
A	Both ends tapped type
L	Foot type
F	Rod side flange type
G	Head side flange type
D	Double clevis type

* Φ20,Φ25 through holes are common to both ends of the screw holes, expressed only by "B"

Bore size

20	20mm
25	25mm
32	32mm
40	40mm
50	50mm
63	63mm
80	80mm
100	100mm

Thread type

Blank	Rc, M5×0.8*
TN	NPT
TF	G

* Suitable for cylinder diameter Φ20, Φ25

Stroke

See the right table

Rod end thread

Blank	Rod end female thread (Standard)
M	Rod end male thread

Magnetic switch type

Blank	Without magnetic switch

* No built-in magnetic ring cylinder have no such item

Number of magnetic switches

Blank	2 pcs.
S	1 pc.
n	"n" pcs.

Stroke/magnetic switch type table

Bore size (mm)	Standard stroke (mm)	*Magnetic switch type		
		Two wire contact control	Two wire contactless control	Three wire NPN
20,25	15,20,25,30,40,50	3C-D-A93(V)L [A93(V)L]	D-M9B(V)L [M9B(V)L]	D-M9N(V)L [M9N(V)L]
32,40	20,25,30,40,50,75,100			
50,63	30,40,50,75,100			
80,100	40,50,75,100			

* At the end of the model, the length of the attached conductor no: mark is 0.5m, L is 3m, Z is 5m, for example: M9N, M9NL.

Dimensions

Φ20, Φ25 Installation form: through hole, screw hole at both ends

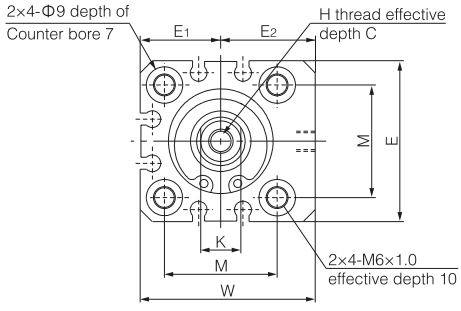

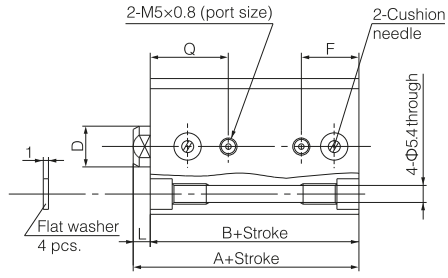

Rod end male thread

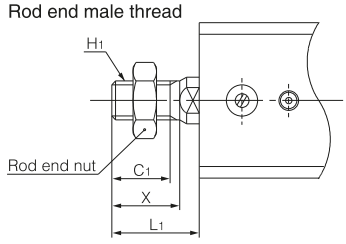

Rod end male thread

Bore size(mm)	C1	X	H1	L1
20	12	14	M8×1.25	18.5
25	15	17.5	M10×1.25	22.5

Standard type

Bore size(mm)	Stroke range(mm)	A	B	C	D	E	E1	E2	F	H	K	L	M	Q	W
20	15~50	36.5	32	7	10	36	18	21	15.5	M5×0.8	8	4.5	25.5	21	39
25	15~50	41.5	36.5	12	12	40	20	23.5	17	M6×1.0	10	5	28	23	43.5

Cylinder
SC
SC(Big)
SCT
SCF
SU
SUF
SI
SIF
DNC
QGB
QGBZ
NCQ2
NCQ2(Big)
NCQ2(Long)
NCQS
NCQM
NRQ
SDA
ADVU
ACE(AND)
MAL
MA
MI
NCM2
NCJ2
NCG1
NCJP
TD
TN(TDA)
NCXS
NCXSW
NMGP
NMGG
NCU
NCUJ
NCY3B
NCY3R
NCY1S
NCY1L
STM
NMXH
NMXS
NMXQ
NMHZ2
NMHC2
NMHL2
NMHY2
NMHT2
NMHW2
NMHF2
NMHS2
NMHS3
NMHS4
NMRHQ
NMSQ
NCRA1
NCRQ2
NCRB2
ACK
SRC
QCK
NCK1

Cylinder
SC
SC(Big)
SCT
SCF
SU
SUF
SI
SIF
DNC
QGB
QGBZ
NCQ2
NCQ2(Big)
NCQ2(Long)
NCQS
NCQM
NRQ
SDA
ADVU
ACE(AND)
MAL
MA
MI
NCM2
NCJ2
NCG1
NCJP
TD
TN(TDA)
NCXS
NCXSW
NMGP
NMGG
NCU
NCUJ
NCY3B
NCY3R
NCY1S
NCY1L
STM
NMXH
NMXS
NMXQ
NMHZ2
NMHC2
NMHL2
NMHY2
NMHT2
NMHW2
NMHF2
NMHS2
NMHS3
NMHS4
NMRHQ
NMSQ
NCRA1
NCRQ2
NCRB2
ACK
SRC
QCK
NCK1

Foot type: NRQL/NRDQL

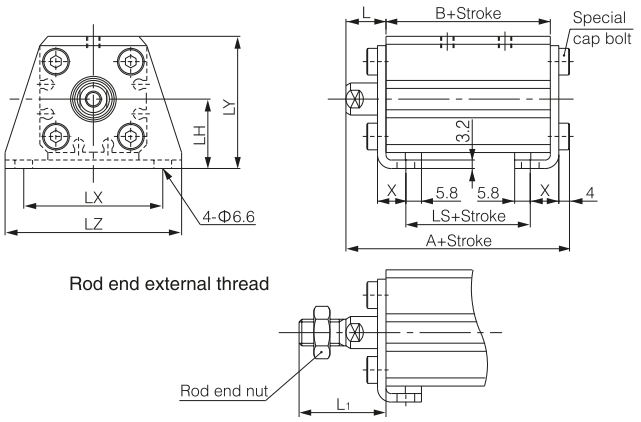

Foot type

Bore size (mm)	Installation type	Stroke range (mm)	A	LS	L	L_1
20	NCQS-L020	15~50	53.7	20	14.5	28.5
25	NCQS-L025	15~50	58.7	21.5	15	32.5

Bore size(mm)	B	LH	LX	LY	LZ	X
20	32	24	48	45	62	9.2
25	36.5	26	52	49.5	66	10.7

(Dimensions A, LS, L, L_1 are different, other sizes are the same.)

Rod side flange type: NRQF/NRDQF

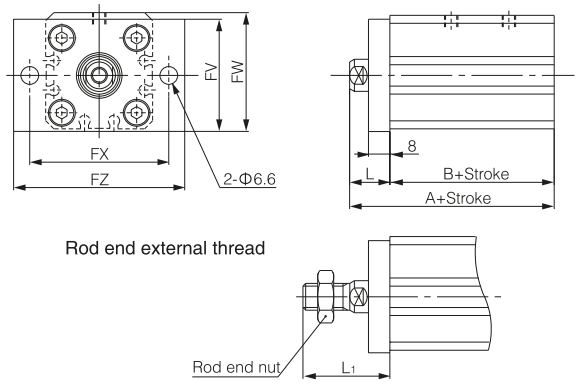

Rod side flange type

Bore size (mm)	Installation type	Stroke range (mm)	A	L	L_1
20	NCQS-F020	15~50	46.5	14.5	28.5
25	NCQS-F025	15~50	51.5	15	32.5

Bore size(mm)	B	FV	FW	FX	FZ
20	32	39	40.5	48	60
25	36.5	42	44.5	52	64

(Dimensions A, L, L_1 are different, other sizes are the same.)

Rodless side flange type: NRQG/NRDQG

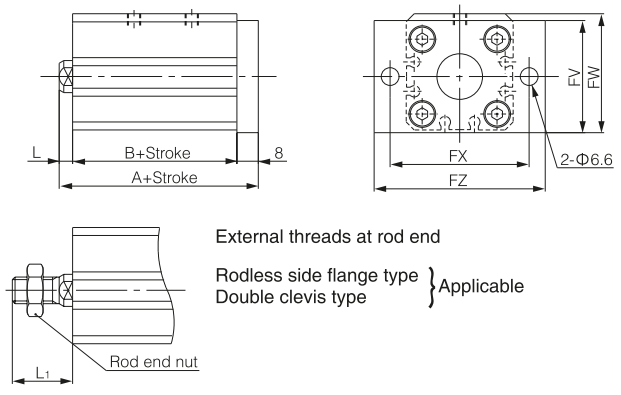

Rodless side flange type

Bore size(mm)	Installation type	Stroke range(mm)	A
20	NCQS-F020	15~50	44.5
25	NCQS-F025	15~50	49.5

Bore size(mm)	B	L	FV	FW	FX	FZ
20	32	4.5	39	40.5	48	60
25	36.5	5	42	44.5	52	64

(Dimension A is different, other sizes are the same.)

Double clevis type: NRQD/NRDQD

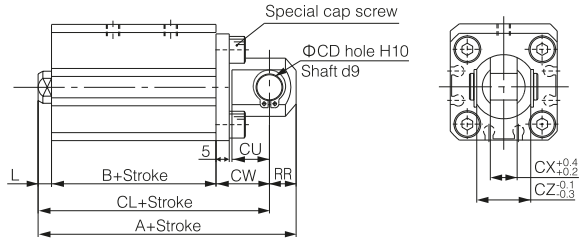

Double clevis type

Bore size(mm)	Installation type	Stroke range(mm)	A	CL
20	NCQS-D020	15~50	63.5	54.5
25	NCQS-D025	15~50	71.5	61.5

Bore size(mm)	B	L	L_1	CD	CU	CW	CX	CZ	RR
20	32	4.5	18.5	8	12	18	8	16	9
25	36.5	5	22.5	10	14	20	10	20	10

(Dimensions A and CL are different, other sizes are the same.)

Φ32, Φ40, Φ50, Φ63, Φ80, Φ100

Standard type (through hole): NRQB/NRDQB

The occasion of screw holes at both ends

Bore size(mm)	OA	RA
32	M6×1.0	10
40	M6×1.0	10
50	M8×1.25	14
63	M10×1.5	18
80	M12×1.75	22
100	M12×1.75	22

Two End Screw Holes: NRQA/NRDQA

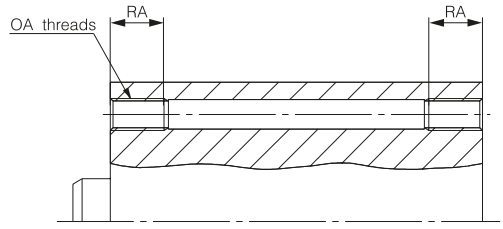

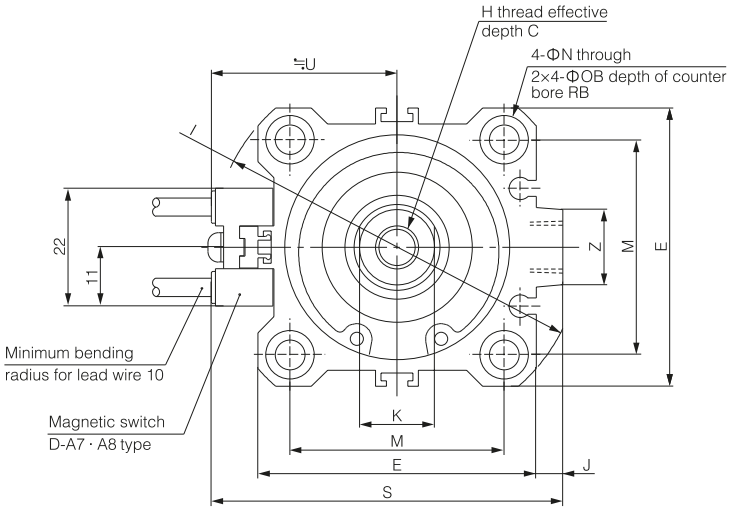

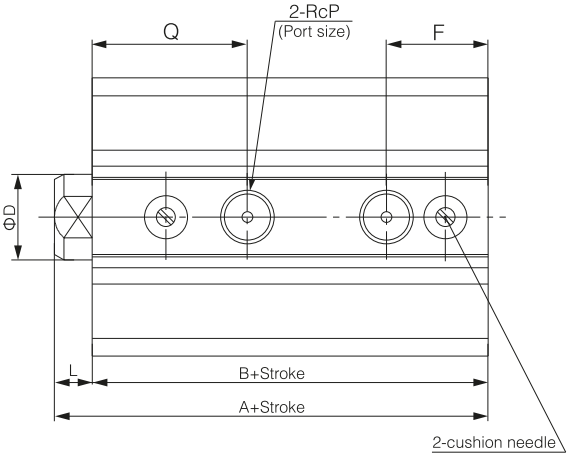

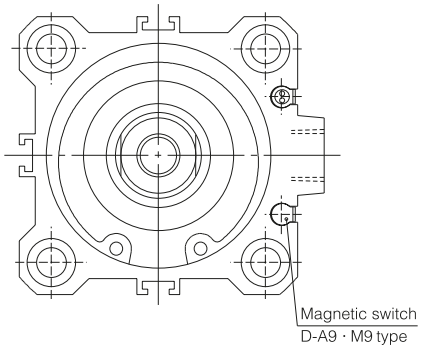

External threads at rod end

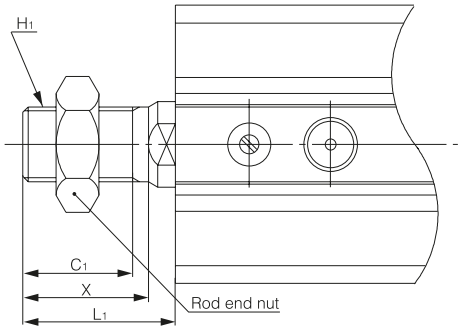

The occasion of rod end external thread

Bore size(mm)	C_1	X	H_1	L_1
32	20.5	23.5	M14×1.5	28.5
40	20.5	23.5	M14×1.5	28.5
50	26	28.5	M18×1.5	33.5
63	26	28.5	M18×1.5	33.5
80	32.5	35.5	M22×1.5	43.5
100	32.5	35.5	M26×2.5	43.5

Standard type

Bore size(mm)	Stroke range(mm)	A	B	C	D	E	F	H	I	J	K	L	M	N	OB	P	Q	RB	S	U	Z
32	20~100	44	37	13	16	45	18.5	M8×1.25	60	4.5	14	7	34	5.5	9	1/8"	23	7	58.5	31.5	14
40	20~100	51	44	13	16	52	20	M8×1.25	69	5	14	7	40	5.5	9	1/8"	28	7	66	35	14
50	30~100	57.5	49.5	15	20	64	28.5	M10×1.5	86	7	17	8	50	6.6	11	1/4"	31.5	8	80	41	19
63	30~100	63	55	15	20	77	31	M10×1.5	103	7	17	8	60	9	14	1/4"	34	10.5	93	47.5	19
80	40~100	73.5	63.5	21	25	98	35.5	M16×2	132	6	22	10	77	11	17.5	3/8"	39	13.5	112.5	57.5	26
100	40~100	88	76	27	30	117	40	M20×2.5	156	6.5	27	12	94	11	17.5	3/8"	43	13.5	132.5	67.5	26

Cylinder
SC
SC(Big)
SCT
SCF
SU
SUF
SI
SIF
DNC
QGB
QGBZ
NCQ2
NCQ2(Big)
NCQ2(Long)
NCQS
NCQM
NRQ
SDA
ADVU
ACE(AND)
MAL
MA
MI
NCM2
NCJ2
NCG1
NCJP
TD
TN(TDA)
NCXS
NCXSW
NMGP
NMGG
NCU
NCUJ
NCY3B
NCY3R
NCY1S
NCY1L
STM
NMXH
NMXS
NMXQ
NMHZ2
NMHC2
NMHL2
NMHY2
NMHT2
NMHW2
NMHF2
NMHS2
NMHS3
NMHS4
NMRHQ
NMSQ
NCRA1
NCRQ2
NCRB2
ACK
SRC
QCK
NCK1

Cylinder
SC
SC(Big)
SCT
SCF
SU
SUF
SI
SIF
DNC
QGB
QGBZ
NCQ2
NCQ2(Big)
NCQ2(Long)
NCQS
NCQM
NRQ
SDA
ADVU
ACE(AND)
MAL
MA
MI
NCM2
NCJ2
NCG1
NCJP
TD
TN(TDA)
NCXS
NCXSW
NMGP
NMGG
NCU
NCUJ
NCY3B
NCY3R
NCY1S
NCY1L
STM
NMXH
NMXS
NMXQ
NMHZ2
NMHC2
NMHL2
NMHY2
NMHT2
NMHW2
NMHF2
NMHS2
NMHS3
NMHS4
NMRHQ
NMSQ
NCRA1
NCRQ2
NCRB2
ACK
SRC
QCK
NCK1

Foot type: NRQL/NRDQL

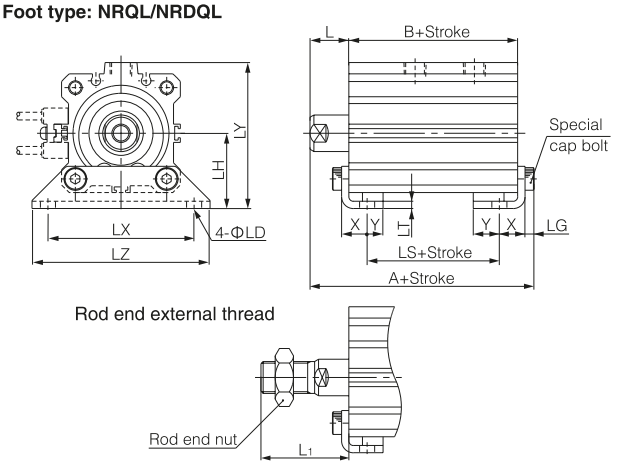

Foot type

Bore size (mm)	Installation type	Stroke range (mm)	A	B	LS	L	L1	LD
32	CQ-L032	20~100	61.2	37	21	17	38.5	6.6
40	CQ-L040	20~100	68.2	44	28	17	38.5	6.6
50	CQ-L050	30~100	75.7	49.5	26.5	18	43.5	9
63	CQ-L063	30~100	81.2	55	29	18	43.5	11
80	CQ-L080	40~100	95	63.5	33.5	20	53.5	13
100	CQ-L100	40~100	111	76	42	22	53.5	13

Bore size(mm)	LG	LH	LX	LY	LZ	X	Y	LT
32	4	30	57	57	71	11.2	5.8	3.2
40	4	33	64	64	78	11.2	7	3.2
50	5	39	79	78	95	14.7	8	3.2
63	5	46	95	91.5	113	16.2	9	3.2
80	7	59	118	114	140	19.5	11	4.5
100	7	71	137	136	162	23	12.5	6

Rod side flange type: NRQF/NRDQF

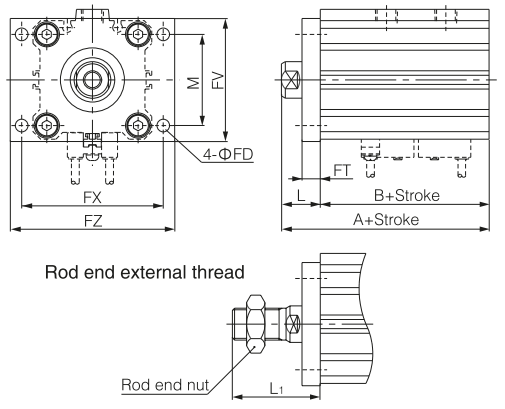

Rod side flange type

Bore size (mm)	Installation type	Stroke range (mm)	A	B	FD	FT	FV
32	CQ-F032	20~100	54	37	5.5	8	48
40	CQ-F040	20~100	61	44	5.5	8	54
50	CQ-F050	30~100	67.5	49.5	6.6	9	67
63	CQ-F063	30~100	73	55	9	9	80
80	CQ-F080	40~100	83.5	63.5	11	11	99
100	CQ-F100	40~100	98	76	11	11	117

Bore size(mm)	FX	FZ	L	L1	M
32	56	65	17	38.5	34
40	62	72	17	38.5	40
50	76	89	18	43.5	50
63	92	108	18	43.5	60
80	116	134	20	53.5	77
100	136	154	22	53.5	94

Rodless side flange type: NRQG/NRDQG

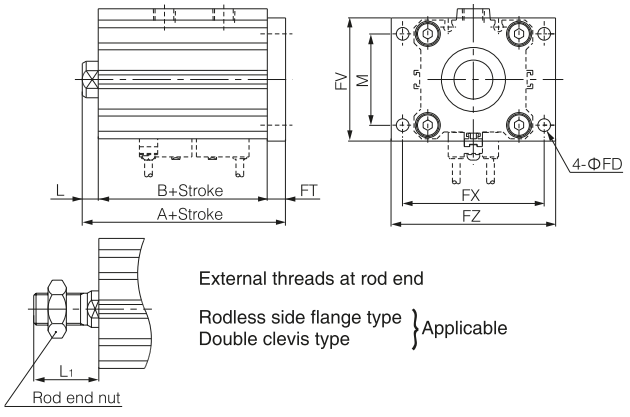

Rodless side flange type

Bore size (mm)	Installation type	Stroke range (mm)	A	L	L1
32	CQ-F032	20~100	52	7	28.5
40	CQ-F040	20~100	59	7	28.5
50	CQ-F050	30~100	66.5	8	33.5
63	CQ-F063	30~100	72	8	33.5
80	CQ-F080	40~100	84.5	10	43.5
100	CQ-F100	40~100	99	12	43.5

* All dimensions but A, L and L_1 are identical to those of the rod side flange type.

Double clevis type: NRQD/NRDQD

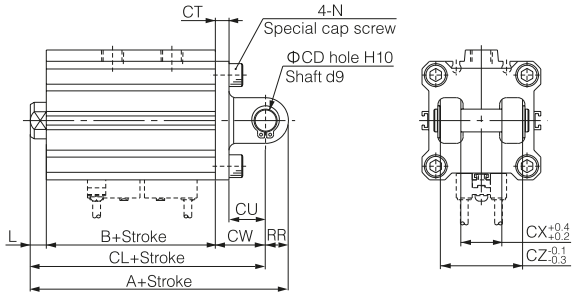

Double clevis type

Bore size (mm)	Installation type	Stroke range (mm)	A	B	CL	CD	CT	CU
32	CQ-D032	20~100	74	37	64	10	5	14
40	CQ-D040	20~100	83	44	73	10	6	14
50	CQ-D050	30~100	99.5	49.5	85.5	14	7	20
63	CQ-D063	30~100	107	55	93	14	8	20
80	CQ-D080	40~100	129.5	63.5	111.5	18	10	27
100	CQ-D100	40~100	155	76	133	22	13	31

Bore size(mm)	CW	CX	CZ	L	L1	N	RR
32	20	18	36	7	28.5	M6×1.0	10
40	22	18	36	7	28.5	M6×1.0	10
50	28	22	44	8	33.5	M8×1.25	147
63	30	22	44	8	33.5	M10×1.5	14
80	38	28	56	10	43.5	M12×1.75	18
100	45	32	64	12	43.5	M12×1.75	22

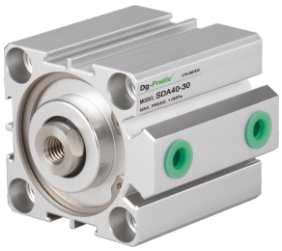

Symbol

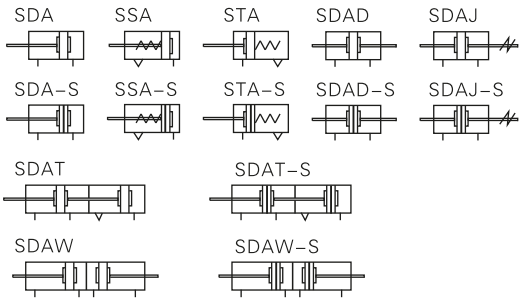

Product feature

1. Manufactured by our enterprise.
2. Riveted structure is adopted to connect the cylinder body and back cover, and piston and piston rod to make it compact and reliable;
3. The inner diameter of the body is treated with rolling followed by the treatment of hard anodizing, forming an excellent abrasion resistance and durability.
4. The seal of piston adopts heterogeneous two-way seal structure. It has compact dimension and the function of grease reservation.
5. Compact structure can effectively save installation space.
6. There are magnetic switch slots around the cylinder body, which is convenient to install sensor switch.
7. Mounting accessories with various specifications are optional.

Specifications

Bore size(mm)		12	16	20	25	32	40	50	63	80	100
Acting type		Double acting									
		Single acting_ Push type, Single acting_ Pull type								-	
Fluid		Air (to be filtered by 40μm filter element)									
Operating pressure	Double acting	0.15~1.0MPa(22~145psi)(1.5~10.0bar)									
	Single acting	0.2~1.0MPa(28~145psi)(2.0~10.0bar)									
Proof pressure		1.5MPa(215psi)(15bar)									
Temperature (℃)		-20~70									
Speed range (mm/s)		Double acting: 30~500, Single acting: 50~500									
Stroke tolerance		Stroke≤$100^{+1.0}_{0}$ Stroke>$100^{+1.5}_{0}$									
Cushion type		Bumper									
Port size Note)		M5×0.8				1/8"		1/4"		3/8"	

Note: PT thread, G thread thread and NPT thread are available.

Stroke

Bore size(mm)			Standard stroke (mm)	Max.std stroke	Max. stroke
12 16	Double acting	With magnet	5 10 15 20 25 30 35 40 45 50	50	70
		Without magnet	5 10 15 20 25 30 35 40 45 50 55 60	60	80
	Single acting		5 10 15 20 25 30	30	-
20	Double acting	With magnet	5 10 15 20 25 30 35 40 45 50 55 60 65 70 75 80 85 90	90	130
		Without magnet	5 10 15 20 25 30 35 40 45 50 55 60 65 70 75 80 85 90 100	100	140
	Single acting		5 10 15 20 25 30	30	-
25 32 40 50 63	Double acting	With magnet	5 10 15 20 25 30 35 40 45 50 55 60 65 70 75 80 85 90 100 110 120	120	150
		Without magnet	5 10 15 20 25 30 35 40 45 50 55 60 65 70 75 80 85 90 100 110 120 130	130	160
	Single acting		5 10 15 20 25 30	23	-
80 100	Double acting	With magnet	5 10 15 20 25 30 35 40 45 50 55 60 65 70 75 80 85 90 100 110 120	120	150
		Without magnet	5 10 15 20 25 30 35 40 45 50 55 60 65 70 75 80 85 90 100 110 120 130	130	160

Note: 1. Please contact the company for other special strokes.
2. The dimensions of non-std stroke cylinder has the same dimensions as the next longer stroke std. stroke cylinder. e.g. 23mm stroke cylinder has the same dimensions of 25 std. stroke cylinder.

Ordering code

SDA 20 × 30
SDAD 20 × 30
SDAJ 20 × 30 - 30 S B □

Model

SDA	Compact cylinder (Double acting)
SSA	Compact cylinder (Single acting-push)
STA	Compact cylinder (Single acting-pull)
SDAD	Compact cylinder (Double rod)
SDAJ	Compact cylinder (Adjustable stroke)

Bore size

SSA, STA	12 16 20 25 32 40 50 63
SDA, SDAD, SDAJ	12 16 20 25 32 40 50 63 80 100

Stroke

Refer to stroke table for details

Adjustable Stroke

SDAJ	10: 10mm
	20: 20mm
	30: 30mm
	40: 40mm
	50: 50mm
	75: 75mm
	100: 100mm
Others	No this code

Magnet code

Blank	Without magnet
S	With magnet

Rod type

Blank	Female thread
B	Male thread

Thread type (Note)

Blank	PT
G	G
T	NPT

SDAT 20 × 30 × 10 S B □

Model

SDAT	Compact cylinder(Duplex type)
SDAW	Compact cylinder(Duplex-end type)

Bore size

12 16 20 25 32 40 50 63 80 100

Stroke 1

Refer to stroke table for details

Stroke 2

Refer to stroke table for details

Magnet code

Blank	Without magnet
S	With magnet

Rod type

Blank	Female thread
B	Male thread

Thread type Note)

Blank	PT
G	G
T	NPT

Note: Standard thread is blank here.

Cylinder
SC
SC(Big)
SCT
SCF
SU
SUF
SI
SIF
DNC
QGB
QGBZ
NCQ2
NCQ2(Big)
NCQ2(Long)
NCQS
NCQM
NRQ
SDA
ADVU
ACE(AND)
MAL
MA
MI
NCM2
NCJ2
NCG1
NCJP
TD
TN(TDA)
NCXS
NCXSW
NMGP
NMGG
NCU
NCUJ
NCY3B
NCY3R
NCY1S
NCY1L
STM
NMXH
NMXS
NMXQ
NMHZ2
NMHC2
NMHL2
NMHY2
NMHT2
NMHW2
NMHF2
NMHS2
NMHS3
NMHS4
NMRHQ
NMSQ
NCRA1
NCRQ2
NCRB2
ACK
SRC
QCK
NCK1

Inner structure and material of major parts

SDA

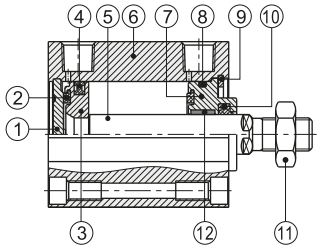

NO.	Item	Material
1	Back cover	No(Φ12, 16)/Aluminum alloy (Others)
2	Bumper	NBR
3	Piston	Brass(Φ12, 16)/Aluminum alloy (Others)
4	Piston seal	NBR
5	Piston rod	Carbon steel with 20μm chrome plated
6	Body	Aluminum alloy
7	Front cover	Aluminum alloy
8	O-ring	NBR
9	C clip	Spring steel
10	Front cover packing	NBR
11	Piston nut	Carbon steel
12	Bushing	No(Φ12~32)/Wear resistant material (Others)

Dimensions

SDA Φ12/Φ16

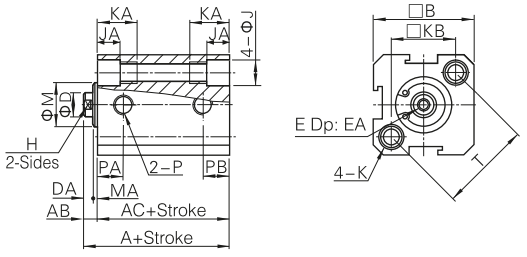

Φ20~Φ100

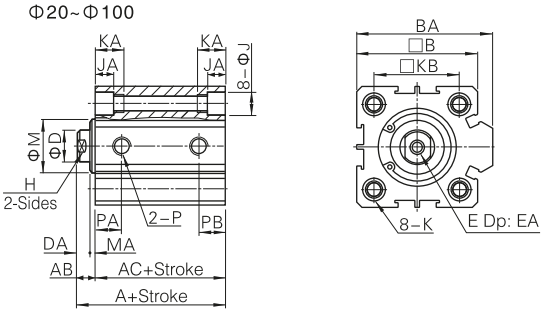

Item / Bore size	A (Without magnet)	AC (Without magnet)	A (With magnet)	AC (With magnet)	AB	B	BA	D	DA	E	EA	H	J	JA	K	KA	KB	M	MA	P	PA St=5	PA St>5	PB St=5	PB St>5	T
12	22	17	32	27	5	25	-	6	4	M3×0.5	6	5	6.5	4.5	M5×0.8Thru.hole:Φ4.2	12	16.2	10.2	1	M5×0.8	7.5	7.5	5	5	23
16	24	18.5	34	28.5	5.5	29	-	6	4	M3×0.5	6	5	6.5	4.5	M5×0.8Thru.hole:Φ4.2	12	19.8	11	1.5	M5×0.8	8	8	5.5	5.5	28
20	25	19.5	35	29.5	5.5	34	36	8	4	M4×0.7	8	6	6.5	4.5	M5×0.8Thru.hole:Φ4.2	14	24	13	1.5	M5×0.8	9	9	5.5	5.5	-
25	27	21	37	31	6	40	42	10	4	M5×0.8	10	8	8.2	5.5	M6×1.0Thru.hole:Φ5.2	15	28	17	2	M5×0.8	9	9	5.5	5.5	-
32	31.5	24.5	41.5	34.5	7	44	50	12	4.5	M6×1.0	12	10	8.2	5.5	M6×1.0Thru.hole:Φ5.2	16	34	22	2.5	1/8"	9	9	6.5	9	-
40	33	26	43	36	7	52	58.5	16	4	M8×1.25	12	14	10.5	6.5	M8×1.25Thru.hole:Φ6.7	20	40	28	3	1/8"	9.5	9.5	7.5	7.5	-
50	37	28	47	38	9	62	71.5	20	5	M10×1.5	15	17	10.5	6.5	M8×1.25Thru.hole:Φ6.7	25	48	38	4	1/4"	8	10.5	8	10.5	-
63	41	32	51	42	9	75	84.5	20	5	M10×1.5	15	17	10.5	6.5	M8×1.25Thru.hole:Φ6.7	25	60	40	4	1/4"	9.5	12	9.5	11	-
80	52	41	62	51	11	94	104	25	6	M14×1.5	20	22	17	11	M12×1.75Thru.hole:Φ10.4	25	74	45	5	3/8"	11.5	14.5	11.5	14.5	-
100	63	51	73	61	12	114	124	32	7	M18×1.5	20	27	19	13	M14×2.0Thru.hole:Φ12.4	30	90	55	5	3/8"	16	20.5	16	20.5	-

Male thread Φ12/Φ16

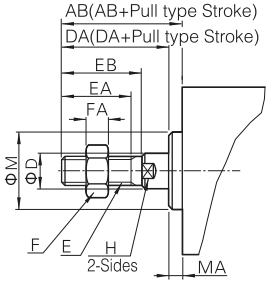

Φ20~Φ100

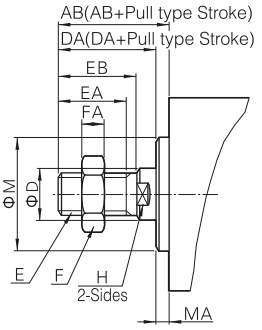

Bore size\Item	AB	D	DA	E	EA	EB	F	FA	H	M	MA SDAD/SDAJ	MA Others
12	17	6	16	M5×0.8	10	12	8	4	5	10.2	1	1
16	17.5	6	16	M5×0.8	10	12	8	4	5	11	1.5	1.5
20	20.5	8	19	M6×1.0	13	15	10	5	6	13	1.5	1.5
25	23	10	21	M8×1.25	15	17	12	6	8	17	2	2
32	25	12	22	M10×1.25	15	18	17	6	10	22	3	2.5
40	35	16	32	M14×1.5	25	28	19	8	14	28	3	3
50	37	20	33	M18×1.5	25	28	27	11	17	38	4	4
63	37	20	33	M18×1.5	25	28	27	11	17	40	4	4
80	44	25	39	M22×1.5	30	33	32	13	22	45	5	5
100	50	32	45	M26×1.5	35	38	36	13	27	55	5	5

SSA

Φ12/Φ16

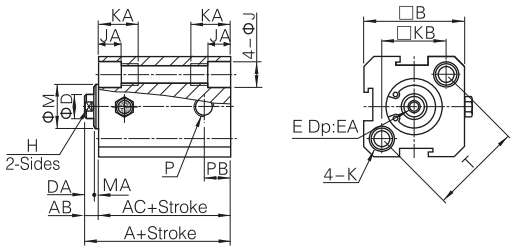

Φ20~Φ63

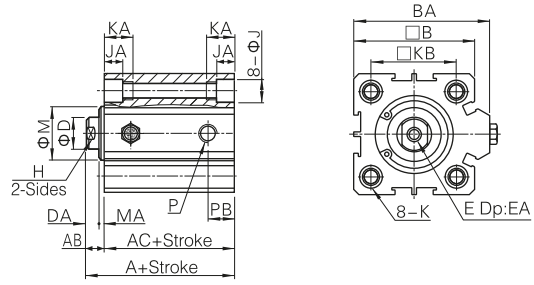

STA

Φ12/Φ16

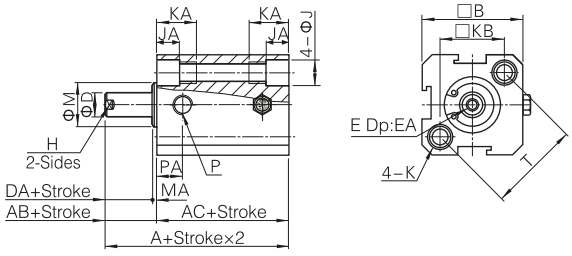

Φ20~Φ63

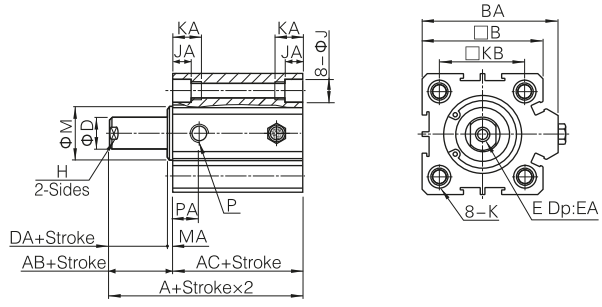

Item	A(Without magnet)		A(With magnet)		AB	AC(Without magnet)		AC(With magnet)		B	BA
Bore size	St≤10	St>10	St≤10	St>10		St≤10	St>10	St≤10	St>10		
12	32	42	42	52	5	27	37	37	47	25	-
16	34	44	44	54	5.5	28.5	38.5	38.5	48.5	29	-
20	35	45	45	55	5.5	29.5	39.5	39.5	49.5	34	36
25	37	47	47	57	6	31	41	41	51	40	42
32	41.5	51.5	51.5	61.5	7	34.5	44.5	44.5	54.5	44	50
40	43	53	53	53	7	36	46	46	56	52	58.5
50	47	57	57	67	9	38	48	48	58	62	71.5
63	51	61	61	71	9	42	52	52	62	75	84.5

Bore size\Item	D	DA	E	EA	H	J	JA	K	KA	KB	M	MA	P	PA	PB	T
12	6	4	M5×0.8	6	5	6.5	4.5	M5×0.8 Thru.hole:Φ4.2	12	16.2	10.2	1	M5×0.8	7.5	5	23
16	6	4	M5×0.8	6	5	6.5	4.5	M5×0.8 Thru.hole:Φ4.2	12	19.8	11	1.5	M5×0.8	8	5.5	28
20	8	4	M5×0.8	8	6	6.5	4.5	M5×0.8 Thru.hole:Φ4.2	14	24	13	1.5	M5×0.8	9	5.5	-
25	10	4	M6×1.0	10	8	8.2	5.5	M6×1.0 Thru.hole:Φ5.2	15	28	17	2	M5×0.8	9	5.5	-
32	12	4	M6×1.0	12	10	8.2	5.5	M6×1.0 Thru.hole:Φ5.2	16	34	22	2.4	1/8"	9	9	-
40	16	4	M8×1.25	12	14	10.5	6.5	M8×1.25 Thru.hole:Φ6.7	20	40	28	3	1/8"	9.5	7.5	-
50	20	5	M8×1.25	15	17	10.5	6.5	M8×1.25 Thru.hole:Φ6.7	25	48	38	4	1/4"	10.5	10.5	-
63	20	5	M8×1.25	15	17	10.5	6.5	M8×1.25 Thru.hole:Φ6.7	25	60	40	4	1/4"	12	11	-

Cylinder
SC
SC(Big)
SCT
SCF
SU
SUF
SI
SIF
DNC
QGB
QGBZ
NCQ2
NCQ2(Big)
NCQ2(Long)
NCQS
NCQM
NRQ
SDA
ADVU
ACE(AND)
MAL
MA
MI
NCM2
NCJ2
NCG1
NCJP
TD
TN(TDA)
NCXS
NCXSW
NMGP
NMGG
NCU
NCUJ
NCY3B
NCY3R
NCY1S
NCY1L
STM
NMXH
NMXS
NMXQ
NMHZ2
NMHC2
NMHL2
NMHY2
NMHT2
NMHW2
NMHF2
NMHS2
NMHS3
NMHS4
NMRHQ
NMSQ
NCRA1
NCRQ2
NCRB2
ACK
SRC
QCK
NCK1

Cylinder
SC
SC(Big)
SCT
SCF
SU
SUF
SI
SIF
DNC
QGB
QGBZ
NCQ2
NCQ2(Big)
NCQ2(Long)
NCQS
NCQM
NRQ
SDA
ADVU
ACE(AND)
MAL
MA
MI
NCM2
NCJ2
NCG1
NCJP
TD
TN(TDA)
NCXS
NCXSW
NMGP
NMGG
NCU
NCUJ
NCY3B
NCY3R
NCY1S
NCY1L
STM
NMXH
NMXS
NMXQ
NMHZ2
NMHC2
NMHL2
NMHY2
NMHT2
NMHW2
NMHF2
NMHS2
NMHS3
NMHS4
NMRHQ
NMSQ
NCRA1
NCRQ2
NCRB2
ACK
SRC
QCK
NCK1

SDAD

Φ12/Φ16

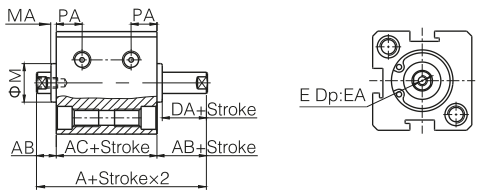

Φ20~Φ63

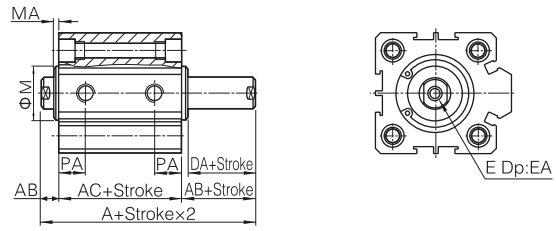

Bore size\Item	A	AC	A	AC	AB	DA	E	EA		M	MA	PA	
	Without magnet		With magnet					St≤10	St>10			St=5	St>5
12	27	17	37	27	5	4	M3×0.5	6	6	10.2	1	5.5	6.3
16	29.5	18.5	39.5	28.5	5.5	4	M3×0.5	6	6	11	1.5	6.5	7.3
20	30.5	19.5	40.5	29.5	5.5	4	M4×0.7	8(6.5 for St=5)		15	1.5	7.5	7.5
25	33	21	43	31	6	4	M5×0.8	10(7 for St=5)		17	2	8	8
32	38.5	24.5	48.5	34.5	7	4	M6×1.0	8	12	22	3	8	9
40	40	26	50	36	7	4	M8×1.25	8	12	28	3	8	10
50	46	28	56	38	9	5	M10×1.5	8	15	38	4	8	10.5
63	50	32	60	42	9	5	M10×1.5	10	15	40	4	9.5	11.8
80	63	41	73	51	11	6	M14×1.5	13	20	45	5	11.5	14.5
100	75	51	85	61	12	7	M18×1.5	18	20	55	5	16	20.5

Note: The unmarked dimension is the same as SDA standard type.

SDAJ

Φ12/Φ16

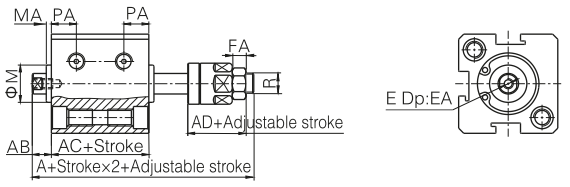

Φ20~Φ63

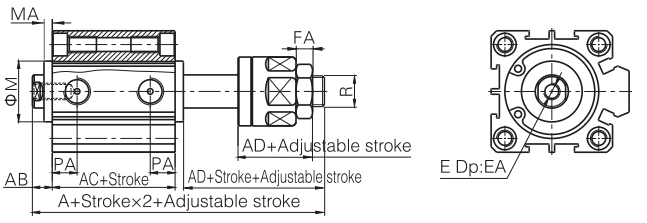

Bore size\Item	A	AC	A	AC	AB	AD	E	EA		FA	M	MA	PA		R
	Without magnet		With magnet					St≤10	St>10				St=5	St>5	
12	40	17	50	27	5	17	M3×0.5	6	6	4	10.2	1	5.5	6.3	M5×0.8
16	42.5	18.5	52.5	28.5	5.5	17	M3×0.5	6	6	4	11	1.5	6.5	7.3	M5×0.8
20	47.5	19.5	57.5	29.5	5.5	21	M4×0.7	8(6.5 for St=5)		5	15	1.5	7.5	7.5	M6×1.0
25	54	21	64	31	6	25	M5×0.8	10(7 for St=5)		6	17	2	8	8	M8×1.25
32	61.5	24.5	71.5	34.5	7	27	M6×1.0	8	12	6	22	3	8	9	M10×1.25
40	64	26	74	36	7	28	M8×1.25	8	12	7	28	3	8	10	M12×1.25
50	70	28	80	38	9	29	M10×1.5	8	15	8	38	4	8	10.5	M16×1.5
63	74	32	84	42	9	29	M10×1.5	10	15	8	40	4	9.5	11.8	M16×1.5
80	92.5	41	102.5	51	11	35.5	M14×1.5	13	20	10	45	5	11.5	14.5	M20×1.5
100	110.5	51	120.5	61	12	42.5	M18×1.5	18	20	13.5	55	5	16	20.5	M27×2.0

Note: The unmarked dimension is the same as SDA standard type.

SDAT

Φ12/Φ16

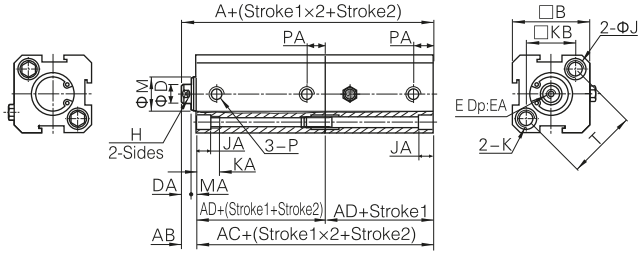

Φ20~Φ100

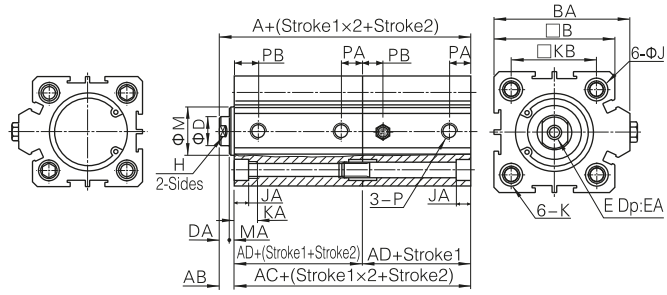

Item / Bore size	A (Without magnet)	AC (Without magnet)	AD (Without magnet)	A (With magnet)	AC (With magnet)	AD (With magnet)	AB	B	BA	D	DA	E	EA	H	J	JA	K	KA	KB	M	MA	P	PA St=5	PA St>5	PB St=5	PB St>5
12	39	34	17	59	54	27	5	25	-	6	4	M3×0.5	6	5	6.5	4.5	M5×0.8 Thru.hole:Φ4.2	12	16.2	10.2	1	M5×0.8	5	5	7.5	7.5
16	42.5	37	18.5	62.5	57	28.5	5.5	29	-	6	4	M3×0.5	6	5	6.5	4.5	M5×0.8 Thru.hole:Φ4.2	12	19.8	11	1.5	M5×0.8	5.5	5.5	8	8
20	44.5	39	19.5	64.5	59	29.5	5.5	34	36	8	4	M4×0.7	8	6	6.5	4.5	M5×0.8 Thru.hole:Φ4.2	14	24	13	1.5	M5×0.8	5.5	5.5	9	9
25	48	42	21	68	62	31	6	40	42	10	4	M5×0.8	10	8	8.2	5.5	M6×1.0 Thru.hole:Φ5.2	15	28	17	2	M5×0.8	5.5	5.5	9	9
32	56	49	24.5	76	69	34.5	7	44	50	12	4	M6×1.0	12	10	8.2	5.5	M6×1.0 Thru.hole:Φ5.2	16	34	22	2.5	1/8"	6.5	9	9	9
40	59	52	26	79	72	36	7	52	58.5	16	4	M8×1.25	12	14	10.5	6.5	M8×1.25 Thru.hole:Φ6.7	20	40	28	3	1/8"	7.5	7.5	9.5	9.5
50	65	56	28	85	76	38	9	62	71.5	20	5	M10×1.5	15	17	10.5	6.5	M8×1.25 Thru.hole:Φ6.7	25	48	38	4	1/4"	8	10.5	8	10.5
63	73	64	32	93	84	42	9	75	84.5	20	5	M10×1.5	15	17	10.5	6.5	M8×1.25 Thru.hole:Φ6.7	25	60	40	4	1/4"	9.5	11	9.5	12
80	93	82	41	113	102	51	11	94	104	25	6	M14×1.5	20	22	17	11	M12×1.75 Thru.hole:Φ10.4	25	74	45	5	3/8"	11.5	14.5	11.5	14.5
100	114	102	51	134	122	61	12	114	124	32	7	M18×1.5	20	27	19	13	M14×2.0 Thru.hole:Φ12.4	30	90	55	5	3/8"	16	20.5	16	20.5

SDAW

Φ12/Φ16

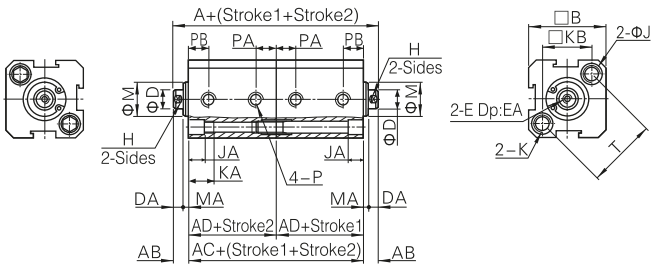

Φ20~Φ100

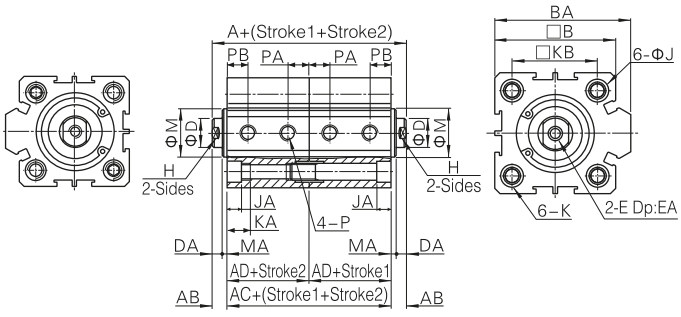

Item / Bore size	A (Without magnet)	AC (Without magnet)	AD (Without magnet)	A (With magnet)	AC (With magnet)	AD (With magnet)	AB	B	BA	D	DA	E	EA	H	J	JA	K	KA	KB	M	MA	P	PA St=5	PA St>5	PB St=5	PB St>5
12	44	34	17	64	54	27	5	25	-	6	4	M3×0.5	6	5	6.5	4.5	M5×0.8 Thru.hole:Φ4.2	12	16.2	10.2	1	M5×0.8	5	5	7.5	7.5
16	48	37	18.5	68	57	28.5	5.5	29	-	6	4	M3×0.5	6	5	6.5	4.5	M5×0.8 Thru.hole:Φ4.2	12	19.8	11	1.5	M5×0.8	5.5	5.5	8	8
20	50	39	19.5	70	59	29.5	5.5	34	36	8	4	M4×0.7	8	6	6.5	4.5	M5×0.8 Thru.hole:Φ4.2	14	24	13	1.5	M5×0.8	5.5	5.5	9	9
25	54	42	21	74	62	31	6	40	42	10	4	M5×0.8	10	8	8.2	5.5	M6×1.0 Thru.hole:Φ5.2	15	28	17	2	M5×0.8	5.5	5.5	9	9
32	63	49	24.5	83	69	34.5	7	44	50	12	4	M6×1.0	12	10	8.2	5.5	M6×1.0 Thru.hole:Φ5.2	16	34	22	2.5	1/8"	6.5	9	9	9
40	66	52	26	86	72	36	7	52	58.5	16	4	M8×1.25	12	14	10.5	6.5	M8×1.25 Thru.hole:Φ6.7	20	40	28	3	1/8"	7.5	7.5	9.5	9.5
50	74	56	28	94	76	38	9	62	71.5	20	5	M10×1.5	15	17	10.5	6.5	M8×1.25 Thru.hole:Φ6.7	25	48	38	4	1/4"	8	10.5	8	10.5
63	82	64	32	102	84	42	9	75	84.5	20	5	M10×1.5	15	17	10.5	6.5	M8×1.25 Thru.hole:Φ6.7	25	60	40	4	1/4"	9.5	11	9.5	12
80	104	82	41	124	102	51	11	94	104	25	6	M14×1.5	20	22	17	11	M12×1.75 Thru.hole:Φ10.4	25	74	45	5	3/8"	11.5	14.5	11.5	14.5
100	126	102	51	146	122	61	12	114	124	32	7	M18×1.5	20	27	19	13	M14×2.0 Thru.hole:Φ12.4	30	90	55	5	3/8"	16	20.5	16	20.5

Cylinder
SC
SC(Big)
SCT
SCF
SU
SUF
SI
SIF
DNC
QGB
QGBZ
NCQ2
NCQ2(Big)
NCQ2(Long)
NCQS
NCQM
NRQ
SDA
ADVU
ACE(AND)
MAL
MA
MI
NCM2
NCJ2
NCG1
NCJP
TD
TN(TDA)
NCXS
NCXSW
NMGP
NMGG
NCU
NCUJ
NCY3B
NCY3R
NCY1S
NCY1L
STM
NMXH
NMXS
NMXQ
NMHZ2
NMHC2
NMHL2
NMHY2
NMHT2
NMHW2
NMHF2
NMHS2
NMHS3
NMHS4
NMRHQ
NMSQ
NCRA1
NCRQ2
NCRB2
ACK
SRC
QCK
NCK1

Cylinder
SC
SC(Big)
SCT
SCF
SU
SUF
SI
SIF
DNC
QGB
QGBZ
NCQ2
NCQ2(Big)
NCQ2(Long)
NCQS
NCQM
NRQ
SDA
ADVU
ACE(AND)
MAL
MA
MI
NCM2
NCJ2
NCG1
NCJP
TD
TN(TDA)
NCXS
NCXSW
NMGP
NMGG
NCU
NCUJ
NCY3B
NCY3R
NCY1S
NCY1L
STM
NMXH
NMXS
NMXQ
NMHZ2
NMHC2
NMHL2
NMHY2
NMHT2
NMHW2
NMHF2
NMHS2
NMHS3
NMHS4
NMRHQ
NMSQ
NCRA1
NCRQ2
NCRB2
ACK
SRC
QCK
NCK1

Symbol

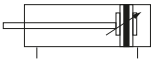

Ordering code

ADVU 50 80 A P A

- **ADVU** – Model
- **50** – Bore size
- **80** – Stroke
- **A** – Rod end thread

Blank	Internal thread
A	External thread

- **P** – Buffer form

P	Double ended unadjustable buffer

- **A** – Position sensing

A	By approaching sensor

Specifications

Bore size(mm)		12	16	20	25	32	40	50	63	80	100	125
Action pattern		Double action										
Working medium		Air										
Proof pressure		1.5MPa										
Working pressure		0.1~1.0MPa										
Port size		M5	M5	M5	M5	1/8"	1/8"	1/8"	1/8"	1/8"	1/4"	1/4"
Piston rod terminal	Internal thread	M3	M4	M5	M5	M6	M6	M8	M8	M10	M12	M16
	External thread	M6	M8	M10×1.25				M12×1.25		M16×1.5	M20×1.5	M27×2
Buffer form		Dual-ended with non-adjustable buffer										
Position sensing		Using proximity sensors										
Installation form		Installation through through through-hole										-
		Installation through internal threads										
		Installation through accessories										
Installation location		Arbitrarily										

Note: PT thread, G thread and NPT thread are available.

Dimensions

Φ12-100mm

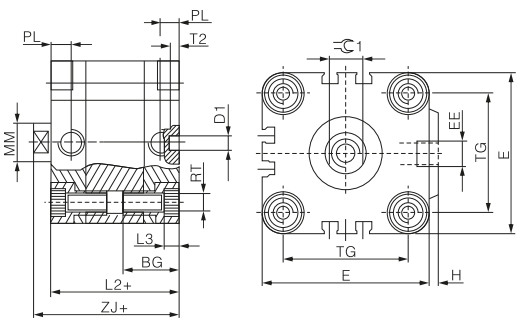

Φ125mm

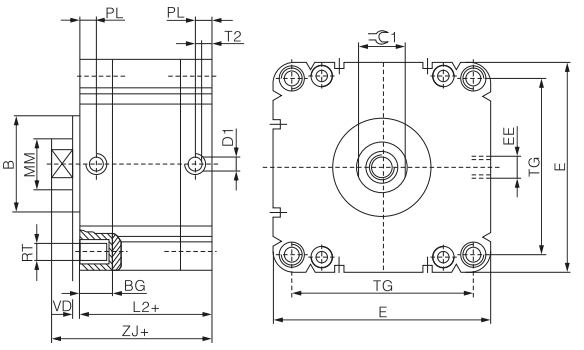

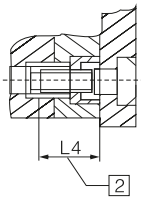

+=Add travel length

2 Minimum spinning depth

Minimum spinning depth 18 mm

Please keep distance between the inner-hexagon screw and the bottom of hole.

+=Add travel length

Note: When installing Φ12 and Φ16 mm cylinders from the front cap, the two installation screws are diagonally layout, and the other arrangement can only use non-magnetic screws.

Bore size \ Symbol	Bd11	BG	D1ΦH9	E	EE	H	L2	L3	L4	MMΦ	PL	RT	T2-0.2	TG	VD	ZJ	⌯C1 h13
12	-	18.5	6	29	M5	1	38	3	16	6	8	M4	4	18	-	42.5	5
16	-	18.5	6	29	M5	1	38	3	16	8	8	M4	4	18	-	42.5	7
20	-	18.5	6	36	M5	1.5	38	4	18	10	8	M5	4	22	-	42.5	9
25	-	18.5	6	40	M5	1.5	39.5	4	18	10	8	M5	4	26	-	45	9
32	-	21.5	6	50	1/8"	2	44.5	5	20	12	8	M6	4	32	-	50.5	10
40	-	21.5	6	60	1/8"	2.5	45.5	5	20	12	8	M6	4	42	-	52	10
50	-	22	6	68	1/8"	3	45.5	6	20	16	8	M8	4	50	-	53	13
63	-	24.5	8	87	1/8"	4	50	8	25	16	8	M10	4	62	-	57.5	13
80	-	27.5	8	107	1/8"	4	56	8	25	20	8.5	M10	4	82	-	64	17
100	-	32.5	8	128	1/4"	5	66.5	8	25	25	10.5	M10	4	103	-	76.5	22
125	60	19.5	10	132	1/4"	-	81	-	18	25	10.5	M12	6	110	4	99	27

Symbol

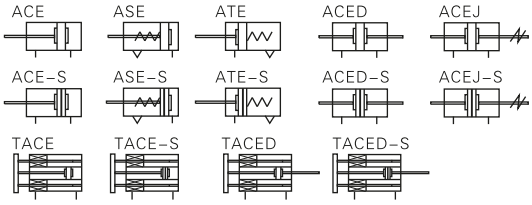

Product feature

1. In accordance with ISO21287 standard, the mounting size is popular.
2. The cylinder body connects with the threads of the front and back cover, forming high strength and convenient maintenance.
3. The internal diameter of the body is treated with rolling followed by the treatment of hard anodizing, forming an excellent abrasion resistance and durability.
4. The seal of piston adopts heterogeneous two-way seal structure. It has compact dimension and the function of oil reservation.
5. Compact structure can effectively save fifty percent installation space with ISO15552 standard cylinder.
6. There are magnetic switch slots around the cylinder body, which is convenient to install inducting switch.
7. Bumper is available and it can availably absorb excrescent energy.
8. Installing accessories with various specifications are optional.

Specifications

Bore size(mm)		12	16	20	25	32	40	50	63	80	100	125
Acting type		Double acting										
		Single acting_ Push type, Single acting_ Pull type										-
Fluid		Air (to be filtered by 40μm filter element)										
Operating pressure	Double acting	0.15~1.0MPa(22~145psi)										
	Single acting	0.2~1.0MPa(28~145psi)										
Proof pressure		1.5MPa(215psi)										
Temperature (℃)		-20~70										
Speed range (mm/s)		Double acting: 30~500, Single acting: 50~500										
Stroke tolerance		Stroke≤$100^{+1.0}_{0}$ Stroke>$100^{+1.5}_{0}$										
Cushion type		Bumper										
Port size Note)		M5×0.8				1/8"						1/4"

Note: PT thread, G thread and NPT thread are available.

Stroke

Bore size(mm)			Standard stroke (mm)	Max. stroke
Common type	Double acting	12	5 10 15 20 25 30 35 40 45 50	50
		16	5 10 15 20 25 30 35 40 45 50 55 60 70 75	75
		20	5 10 15 20 25 30 35 40 45 50 55 60 70 75 80 90 100	100
		25	5 10 15 20 25 30 35 40 45 50 55 60 70 75 80 90 100 110 120 125 150	150
		32 40	5 10 15 20 25 30 35 40 45 50 55 60 70 75 80 90 100 110 120 125 150 160 175 200	200
		50 63	5 10 15 20 25 30 35 40 45 50 55 60 70 75 80 90 100 110 120 125 150 160 175 200 225 250	250
		80 100 125	5 10 15 20 25 30 35 40 45 50 55 60 70 75 80 90 100 110 120 125 150 160 175 200 225 250 275 300	300
	Single acting	12	5 10	10
		16~100	5 10 15 20 25	25
Non-rotating with yoke	Double acting	12	5 10 15 20 25 30 35 40 45 50	50
		16	5 10 15 20 25 30 35 40 45 50 55 60 70 75	75
		20 25	5 10 15 20 25 30 35 40 45 50 55 60 70 75 80 90 100	100
		32 40	5 10 15 20 25 30 35 40 45 50 55 60 70 75 80 90 100	100
		50 63	5 10 15 20 25 30 35 40 45 50 55 60 70 75 80 90 100	100
		80 100	5 10 15 20 25 30 35 40 45 50 55 60 70 75 80 90 100	100

Note: 1. Please contact the company for other special strokes.
2. The dimensions of non-std stroke cylinder has the same dimensions as the longer std. stroke cylinder. e.g. 23mm stroke cylinder has the same dimensions of 25 std. stroke cylinder.

Ordering code

ACE 20 × 30 S B
ACED 20 × 30 S B
ACEJ 20 × 30 30 - S B

Model

ACE	Compact cylinder(Double acting)
ASE	Compact cylinder(Single acting-push)
ATE	Compact cylinder(Single acting-pull)
ACED	Compact cylinder(Double rod)
ACEJ	Compact cylinder(Adjustable stroke)
TACE	Compact cylinder (Double acting non-rotating with yoke)
TACED	Compact cylinder (Double rod non-rotating with yoke)

Bore size

Mobel	Bore size
ACE ACED/ACEJ	12 16 20 25 32 40 50 63 80 100 125
ASE/ATE ACED/ACEJ	12 16 20 25 32 40 50 63 80 100

Stroke

Refer to stroke table for details

Adjustable Stroke

ACEJ	10: 10mm
	20: 20mm
	30: 30mm
	40: 40mm
	50: 50mm
	75: 75mm
	100: 100mm
Others	No this code

Magnet code

Blank	Without magnet
S	With magnet

Rod type

ACE/ASE/ATE ACED/ACEJ	Blank: Female thread
	B: Male thread
TACE/TACED	No this code

Mounting type Note 2)

All model	Blank: No accessories
ACE ASE ATE	FA: FA type
	FB: FB type
	CA: CA type
	CB: CB type
	CR: CR type
	FTC: FTC type
	LB: LB type
	SDB: SDB type
ACED ACEJ	FA: FA type
	FTC: FTC type
	LB: LB type
TACE	FB: FB type
	CA: CA type
	CB: CB type
	CR: CR type
	FTC: FTC type
TACED	FB: FB type

Thread type Note 1)

Blank	PT
G	G
T	NPT

Note: 1. Standard thread is blank here.
2. CR must be used with CA, FTC must be used with TCM2.

Cylinder
SC
SC(Big)
SCT
SCF
SU
SUF
SI
SIF
DNC
QGB
QGBZ
NCQ2
NCQ2(Big)
NCQ2(Long)
NCQS
NCQM
NRQ
SDA
ADVU
ACE(AND)
MAL
MA
MI
NCM2
NCJ2
NCG1
NCJP
TD
TN(TDA)
NCXS
NCXSW
NMGP
NMGG
NCU
NCUJ
NCY3B
NCY3R
NCY1S
NCY1L
STM
NMXH
NMXS
NMXQ
NMHZ2
NMHC2
NMHL2
NMHY2
NMHT2
NMHW2
NMHF2
NMHS2
NMHS3
NMHS4
NMRHQ
NMSQ
NCRA1
NCRQ2
NCRB2
ACK
SRC
QCK
NCK1

Inner structure and material of major parts

ACE-S

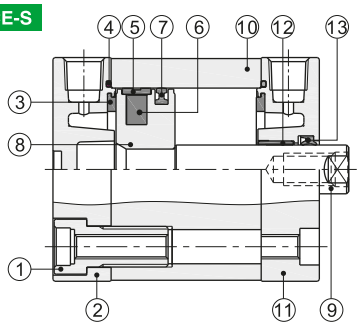

TACE-S

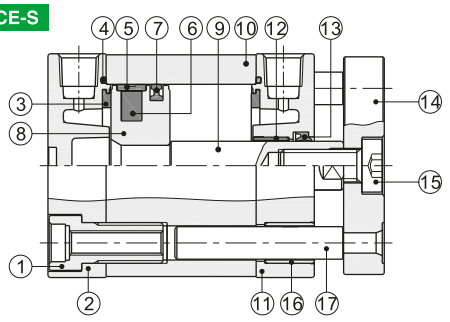

NO.	Item	Material
1	Screw	Carbon steel
2	Back cover	Aluminum alloy
3	Bumper	TPU
4	O-ring	NBR
5	Wear ring	No(Φ12~20)\Wear resistant material(Others)
6	Magnet	Sintered metal(Neodymium-iron-boron)(Φ12~20)\Plastic(Others)
7	Piston seal	NBR
8	Piston	Aluminum alloy
9	Piston rod	S45C
10	Body	Aluminum alloy
11	Front cover	Aluminum alloy
12	Bushing	No(Φ12~20)\Wear resistant material(Others)
13	Front cover packing	NBR
14	Panel	Aluminum alloy
15	Screw	Carbon steel
16	Bushing	Wear resistant material
17	Guide rod	Stainless steel(Φ12~40)\S45C(Others)

Dimensions

ACE

Φ12

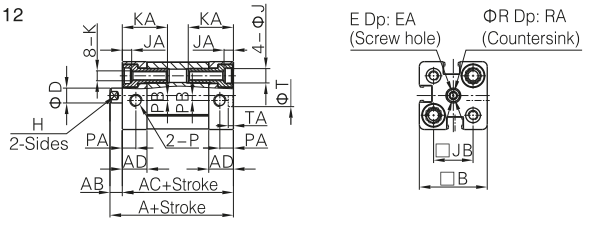

Φ16~Φ25

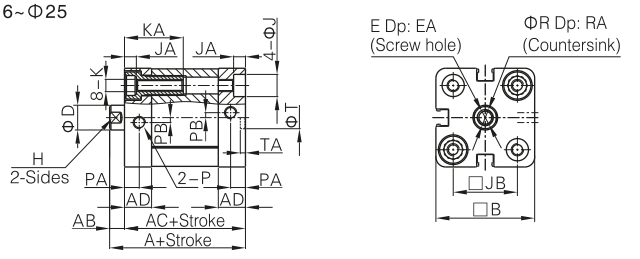

Φ32~Φ63

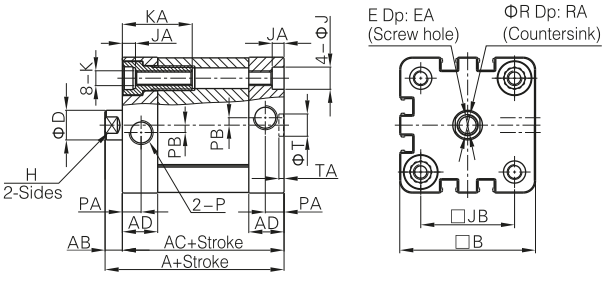

Φ80~Φ125

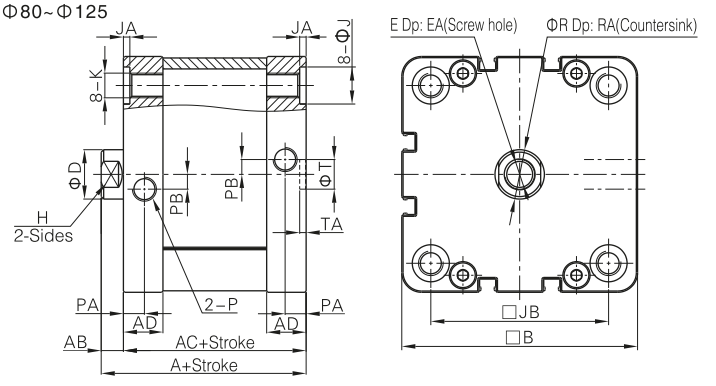

Bore size\Item	A	AB	AC	AD	B	D	E	EA	H	J	JA	JB	K	KA	P	PA	PB	R	RA	T	TA
12	40	5	35	10	27.5	6	M3×0.5	8	5	6	3.5	16	M4×0.7	18.5	M5×0.8	5.5	2	3.5	1.5	9	2.1
16	40	5	35	10	30	8	M4×0.7	10	7	6	3.5	18	M4×0.7	18.5	M5×0.8	5.5	2	4.5	1.5	9	2.1
20	43	6	37	10.5	35.5	10	M6×1.0	14	9	9	4.5	22	M5×0.8	23.5	M5×0.8	6	2	6.5	2.5	9	2.1
25	45	6	39	11	40	10	M6×1.0	14	9	9	4.5	26	M5×0.8	23.5	M5×0.8	6	2	6.5	2.5	9	2.1
32	51	7	44	14	49.5	12	M8×1.25	16	10	9	4.5	32.5	M6×1.0	28.5	1/8"	7.5	3	8.5	3.5	9	2.1
40	52.5	7	45.5	14.5	55	12	M8×1.25	16	10	9	4.5	38	M6×1.0	28.5	1/8"	7.5	3	8.5	3.5	9	2.1
50	53.5	8	45.5	14.5	65.5	16	M10×1.5	20	13	11	4.5	46.5	M8×1.25	30.5	1/8"	7.5	3	10.5	4.5	12	2.6
63	57	8	49	15	75.5	16	M10×1.5	20	13	11	4.5	56.5	M8×1.25	30.5	1/8"	7.5	4	10.5	4.5	12	2.6
80	63	9	57	16	95.5	20	M12×1.75	20	17	15	2.5	72	M10×1.5	-	1/8"	8.5	6	12.5	6	12	2.6
100	76	9	67	19	113.5	20	M12×1.75	20	17	15	2.5	89	M10×1.5	-	1/8"	10.5	7	12.5	6	12	2.6
125	92	11	81	20	134.5	25	M16×2.0	25	21	-	-	110	M12×1.75	-	1/4"	10.5	8	16.5	7	12	2.6

Note: The dimensions of magnet type cylinder are the same as non-magnet type cylinder.

ASE

Φ12

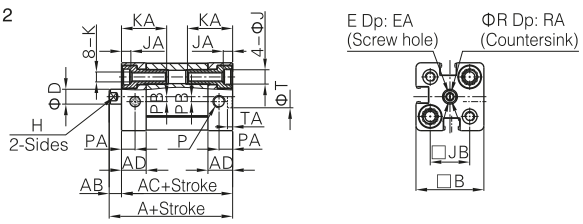

Φ16~Φ25

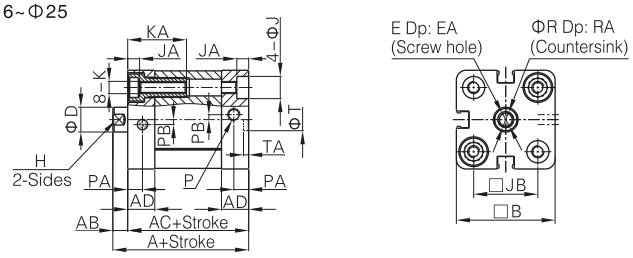

Φ32~Φ63

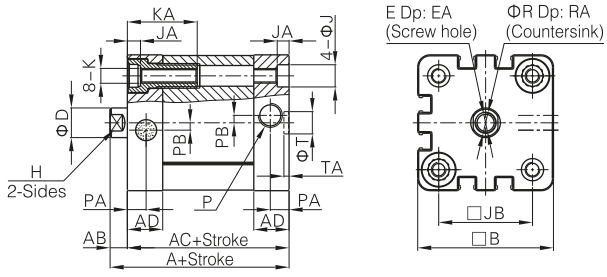

Φ80\Φ100

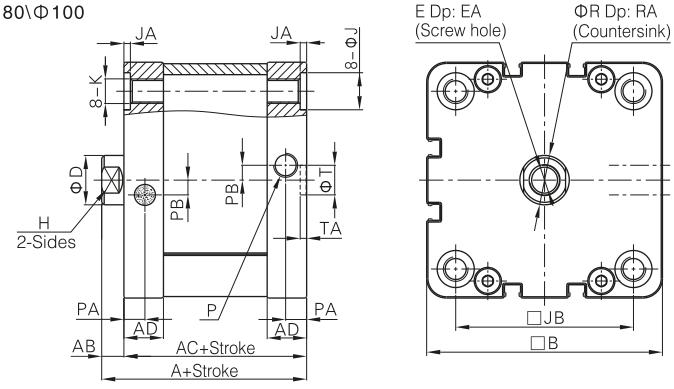

ATE

Φ12

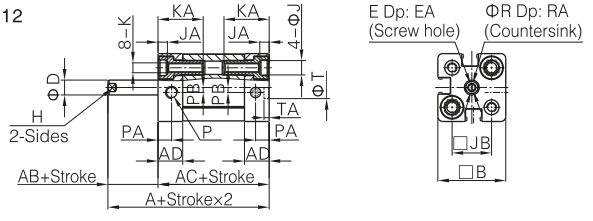

Φ16~Φ25

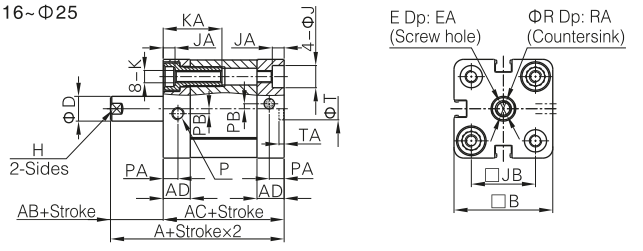

Φ32~Φ63

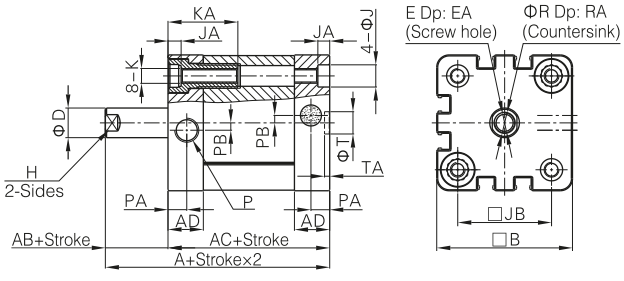

Φ80\Φ100

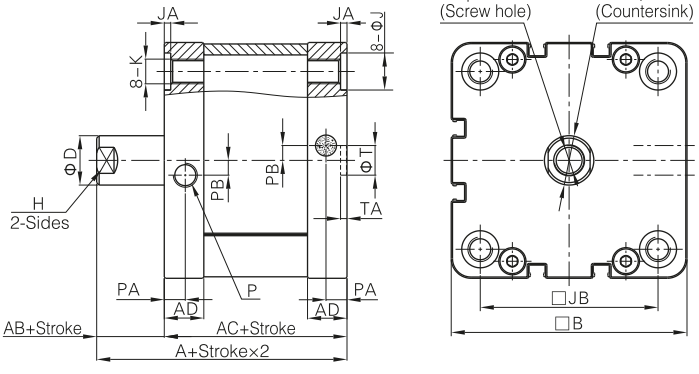

Bore size\Item	A	AB	AC	AD	B	D	E	EA	H	J	JA	JB	K	KA	P	PA	PB	R	RA	T	TA
12	40	5	35	10	27.5	6	M3×0.5	8	5	6	3.5	16	M4×0.7	18.5	M5×0.8	5.5	2	3.5	1.5	9	2.1
16	40	5	35	10	30	8	M4×0.7	10	7	6	3.5	18	M4×0.7	18.5	M5×0.8	5.5	2	4.5	1.5	9	2.1
20	43	6	37	10.5	35.5	10	M6×1.0	14	9	9	4.5	22	M5×0.8	23.5	M5×0.8	6	2	6.5	2.5	9	2.1
25	45	6	39	11	40	10	M6×1.0	14	9	9	4.5	26	M5×0.8	23.5	M5×0.8	6	2	6.5	2.5	9	2.1
32	51	7	44	14	49.5	12	M8×1.25	16	10	9	4.5	32.5	M6×1.0	28.5	1/8"	7.5	3	8.5	3.5	9	2.1
40	52.5	7	45.5	14.5	55	12	M8×1.25	16	10	9	4.5	38	M6×1.0	28.5	1/8"	7.5	3	8.5	3.5	9	2.1
50	53.5	8	45.5	14.5	65.5	16	M10×1.5	20	13	11	4.5	46.5	M8×1.25	30.5	1/8"	7.5	3	10.5	4.5	12	2.6
63	57	8	49	15	75.5	16	M10×1.5	20	13	11	4.5	56.5	M8×1.25	30.5	1/8"	7.5	4	10.5	4.5	12	2.6
80	63	9	57	16	95.5	20	M12×1.75	20	17	15	2.5	72	M10×1.5	-	1/8"	8.5	6	12.5	6	12	2.6
100	76	9	67	19	113.5	20	M12×1.75	20	17	15	2.5	89	M10×1.5	-	1/8"	10.5	7	12.5	6	12	2.6

Note: The dimensions of magnet type cylinder are the same as non-magnet type cylinder.

Cylinder
SC
SC(Big)
SCT
SCF
SU
SUF
SI
SIF
DNC
QGB
QGBZ
NCQ2
NCQ2(Big)
NCQ2(Long)
NCQS
NCQM
NRQ
SDA
ADVU
ACE(AND)
MAL
MA
MI
NCM2
NCJ2
NCG1
NCJP
TD
TN(TDA)
NCXS
NCXSW
NMGP
NMGG
NCU
NCUJ
NCY3B
NCY3R
NCY1S
NCY1L
STM
NMXH
NMXS
NMXQ
NMHZ2
NMHC2
NMHL2
NMHY2
NMHT2
NMHW2
NMHF2
NMHS2
NMHS3
NMHS4
NMRHQ
NMSQ
NCRA1
NCRQ2
NCRB2
ACK
SRC
QCK
NCK1

Cylinder
SC
SC(Big)
SCT
SCF
SU
SUF
SI
SIF
DNC
QGB
QGBZ
NCQ2
NCQ2(Big)
NCQ2(Long)
NCQS
NCQM
NRQ
SDA
ADVU
ACE(AND)
MAL
MA
MI
NCM2
NCJ2
NCG1
NCJP
TD
TN(TDA)
NCXS
NCXSW
NMGP
NMGG
NCU
NCUJ
NCY3B
NCY3R
NCY1S
NCY1L
STM
NMXH
NMXS
NMXQ
NMHZ2
NMHC2
NMHL2
NMHY2
NMHT2
NMHW2
NMHF2
NMHS2
NMHS3
NMHS4
NMRHQ
NMSQ
NCRA1
NCRQ2
NCRB2
ACK
SRC
QCK
NCK1

ACED

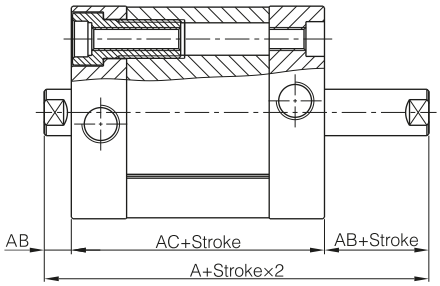

ACEJ

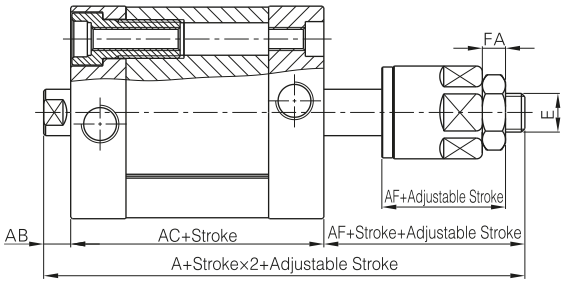

Bore size\Item	A(ACED)	A(ACEJ)	AB	AC	AF	FA	E
12	45	57	5	35	17	4	M5×0.8
16	45	61	5	35	21	5	M6×1.0
20	49	68	6	37	25	6	M8×1.25
25	51	70	6	39	25	6	M8×1.25
32	58	78	7	44	27	6	M10×1.25
40	59.5	79.5	7	45.5	27	6	M10×1.25
50	61.5	81.5	8	45.5	28	7	M12×1.25
63	65	85	8	49	28	7	M12×1.25
80	72	92	9	54	29	8	M16×1.5
100	85	105	9	67	29	8	M16×1.5
125	103	127.5	11	81	35.5	10	M20×1.5

Note:
1. The unmarkde dimension is the same as ACE standard type;
2. The dimensions of magnet type cylinder are the same as non-magnet type cylinder.

TACE

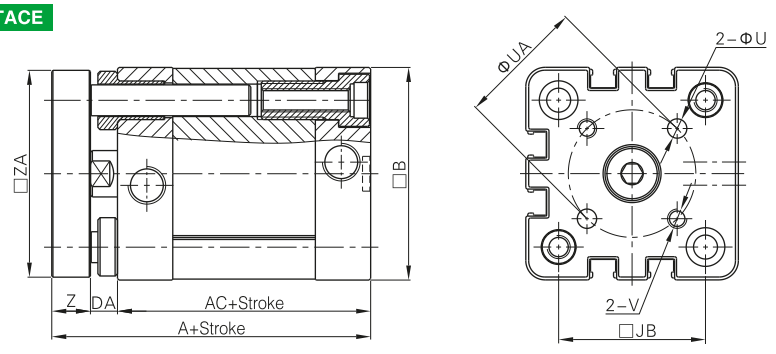

Male thread

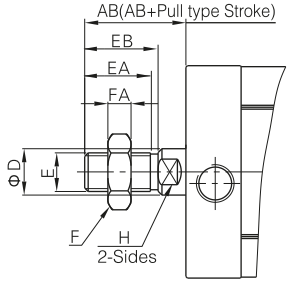

Bore size\Item	AB	D	E	EA	EB	F	FA	H
12	15	6	M5×0.8	9	10	8	4	5
16	17	8	M6×1.0	11	12	10	5	7
20	22	10	M8×1.25	15	16	12	6	9
25	22	10	M8×1.25	15	16	12	6	9
32	26	12	M10×1.25	17	19	17	6	10
40	26	12	M10×1.25	17	19	17	6	10
50	30	16	M12×1.25	20	22	17	7	13
63	30	16	M12×1.25	20	22	17	7	13
80	34	20	M16×1.5	26	28	23	8	17
100	34	20	M16×1.5	26	28	23	8	17
125	51	25	M20×1.5	38	40	26	10	21

TACED

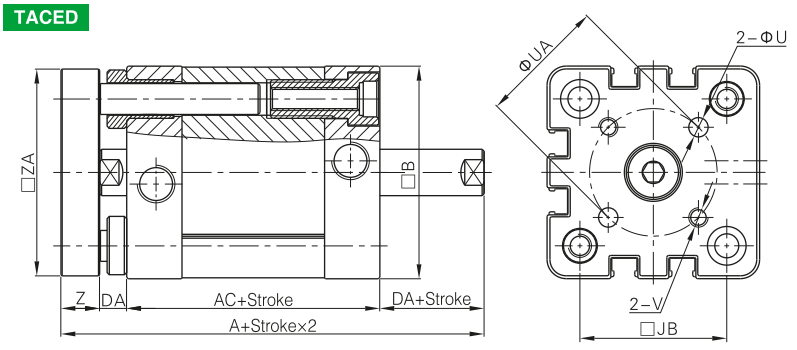

Bore size\Item	A(TACE)	A(TACED)	AC	B	DA	JB	U	UA	V	Z	ZA
12	46	51	35	27.5	5	16	3	12	M3×0.5	6	26.5
16	46	51	35	30	5	18	3	14	M3×0.5	6	29
20	51	57	37	35.5	6	22	5	17	M4×0.7	8	34.5
25	53	59	39	40	6	26	5	22	M5×0.8	8	39
32	61	68	44	49.5	7	32.5	5	28	M5×0.8	10	48
40	62.5	69.5	45.5	55	7	38	5	33	M5×0.8	10	53.5
50	65.5	73.5	45.5	65.5	8	46.5	6	42	M6×1.0	12	64
63	69	77	49	75.5	8	56.5	6	50	M6×1.0	12	74
80	77	86	54	95.5	9	72	8	65	M8×1.25	14	94
100	90	99	67	113.5	9	89	10	80	M10×1.5	14	112

Note: 1. The unmarkde dimension is the same as ACE standard type;
2. The dimensions of magnet type cylinder are the same as non-magnet type cylinder.

List for ordering code of accessories

Accessories Bore size	Mounting accessories								Knuckle				Sensor switch	
	LB	FA/FB	CA	CB	CR	SDB	FTC	TCM2	I	Y	F	U	CS1-E	DS1-E
12	F-ACE12LB	F-ACE12FA	F-ACE12CA	-	-	F-MI12SDB	-	-	F-ACQ12I	F-ACQ12Y	F-M5×080F	F-M5×080U	CS1-E	DS1-E
16	F-ACP12LB	F-ACE16FA	F-ACE16CA	-	-	F-MI12SDB	-	-	F-M6×100I	F-M6×100Y	F-M6×100F	F-M6×100U		
20	F-ACP20LB	F-ACE20FA	F-ACE20CA	-	-	F-MI20SDB	-	-	F-M8×125I	F-M8×125Y	F-M8×125F	F-M8×125U		
25	F-ACP25LB	F-ACE25FA	F-ACE25CA	-	-	F-MI20SDB	-	-						
32	F-ACE32LB	F-SI32FA	F-SE32CA	F-SE32CB	F-SI32CR	-	F-SI32FTC	F-SI32TCM2	F-M10×125I	F-M10×125Y	F-M10×125F	F-M10×125U		
40	F-ACE40LB	F-SI40FA	F-SE40CA	F-SE40CB	F-SI40CR	-	F-SI40FTC	F-SI40TCM2						
50	F-ACE50LB	F-SI50FA	F-SE50CA	F-SE50CB	F-SI50CR	-	F-SI50FTC	F-SI50TCM2	F-M12×125I	F-M12×125Y	F-M12×125F	F-M12×125U		
63	F-ACE63LB	F-SI63FA	F-SE63CA	F-SE63CB	F-SI63CR	-	F-SI63FTC	F-SI63TCM2						
80	F-ACE80LB	F-SI80FA	F-SE80CA	F-SE80CB	F-SI80CR	-	F-SI80FTC	F-SI80TCM2	F-M16×150I	F-M16×150Y	F-M16×150F	F-M16×150U		
100	F-ACE100LB	F-SI100FA	F-SE100CA	F-SE100CB	F-SI100CR	-	F-SI100FTC	F-SI100TCM2						
125	-	F-SI125FA	F-SE125CA	F-SE125CB	F-SI125CR	-	F-SI125FTC	F-SI125TCM2	F-M20×150I	F-M20×150Y	F-M20×150F	F-M20×150U		

Accessory selection

Cylinder model\Accessories			Mounting accessories									Knuckle				Sensor switch	
			LB	FA	FB	CA	CB	CR	SDB	FTC	TCM2	I	Y	F	U	CS1-E	DS1-E
ACE	Female thread	Without magnet	●	●	●	●	●	●	●	●	●	×	×	×	×	×	×
		With magnet														●	●
	Male thread	Without magnet										●	●	●	●	×	×
		With magnet														●	●
ASE ATE	Female thread	Without magnet	●	●	●	●	●	●	●	●	●	×	×	×	×	×	×
		With magnet														●	●
	Male thread	Without magnet										●	●	●	●	×	×
		With magnet														●	●
ACED ACEJ	Female thread	Without magnet	●	●	×	×	×	×	×	●	●	×	×	×	×	×	×
		With magnet														●	●
	Male thread	Without magnet										●	●	●	●	×	×
		With magnet														●	●
TACE	Female thread	Without magnet	×	×	●	●	●	●	●	●	●	×	×	×	×	×	×
		With magnet														●	●
TACED	Female hread	Without magnet	×	×	×	●	×	×	×	×	×	×	×	×	×	×	×
		With magnet														●	●

Material of accessories

Accessories Bore size	Mounting accessories									Knuckle			
	LB	FA	FB	CA	CB	CR	SDB	FTC	TCM2	I	Y	F	U
12~25	△	●	●	●	–	–	△	■	●	□	□	□	□
32~100	△	●	●	●	◇	◇	–	■	●	□	□	□	□
125	–	◇	◇	◇	◇	◇	–	■	●	□	□	□	□

●——Aluminum alloy; ■——Cast iron; ◇——Ductile Iron; △——SPCC; □——Carbon Steel

Accessories dimensions

LB

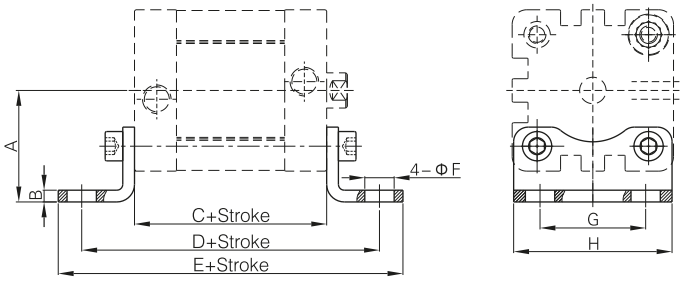

Bore size\Item	A	B	C	D	E	F	G	H
12	21	3	35	61	71	5.5	16	25
16	22	3	35	61	70.6	5.5	18	27
20	27	3.8	37	69	81.6	6.5	22	34
25	29	3.8	39	71	83.6	6.5	26	38
32	33.5	4	44	76	89	7	32	48
40	38	4	45.5	81.5	97.5	10	36	54
50	45	5	45.5	87.5	103.5	10	45	65
63	50	5	49	91	107	10	50	75
80	63	6	54	106	127	12	63	95
100	74	6	67	121	146	14.5	75	112

Note: Value C in the above table is only for ACE series.
Please refer to relevant content for value C of other series.

Cylinder
SC
SC(Big)
SCT
SCF
SU
SUF
SI
SIF
DNC
QGB
QGBZ
NCQ2
NCQ2(Big)
NCQ2(Long)
NCQS
NCQM
NRQ
SDA
ADVU
ACE(AND)
MAL
MA
MI
NCM2
NCJ2
NCG1
NCJP
TD
TN(TDA)
NCXS
NCXSW
NMGP
NMGG
NCU
NCUJ
NCY3B
NCY3R
NCY1S
NCY1L
STM
NMXH
NMXS
NMXQ
NMHZ2
NMHC2
NMHL2
NMHY2
NMHT2
NMHW2
NMHF2
NMHS2
NMHS3
NMHS4
NMRHQ
NMSQ
NCRA1
NCRQ2
NCRB2
ACK
SRC
QCK
NCK1

Cylinder
SC
SC(Big)
SCT
SCF
SU
SUF
SI
SIF
DNC
QGB
QGBZ
NCQ2
NCQ2(Big)
NCQ2(Long)
NCQS
NCQM
NRQ
SDA
ADVU
ACE(AND)
MAL
MA
MI
NCM2
NCJ2
NCG1
NCJP
TD
TN(TDA)
NCXS
NCXSW
NMGP
NMGG
NCU
NCUJ
NCY3B
NCY3R
NCY1S
NCY1L
STM
NMXH
NMXS
NMXQ
NMHZ2
NMHC2
NMHL2
NMHY2
NMHT2
NMHW2
NMHF2
NMHS2
NMHS3
NMHS4
NMRHQ
NMSQ
NCRA1
NCRQ2
NCRB2
ACK
SRC
QCK
NCK1

FA/FB

Φ12~Φ25

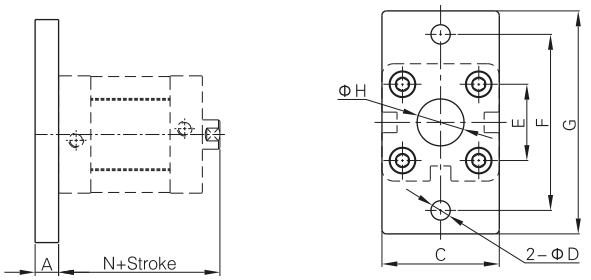

Φ32~Φ125

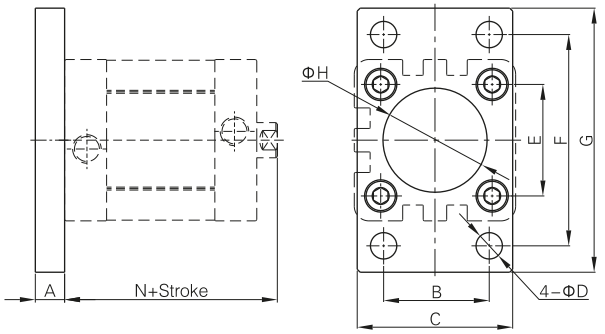

Bore size\Item	A	B	C	D	E	F	G	H	N
12	8	-	25	5.5	16	40	55	10	40
16	8	-	30	5.5	18	53	55	10	40
20	8	-	35	6.6	22	55	68	16	43
25	8	-	39.5	6.6	26	60	76	16	45
32	10	32	47	7	32.5	64	80	30.5	51
40	10	36	53	9	38	72	90	35.5	52.5
50	12	45	65	9	46.5	90	108	40.5	53.5
63	12	50	75	9	56.5	100	118	45.5	57
80	16	63	95	12.5	72	126	150	45.5	63
100	16	75	115	14.5	89	150	176	55.5	76
125	20	90	139	16.5	110	180	218	60.5	92

CA

Φ12~Φ25

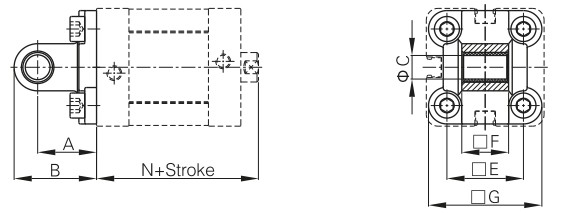

Φ32~Φ125

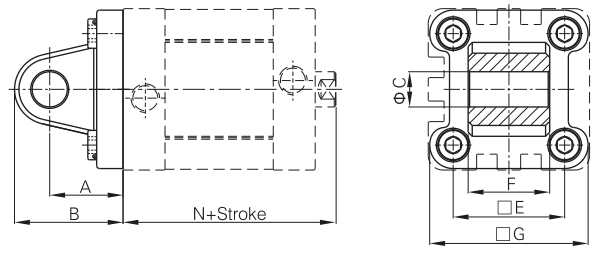

Bore size\Item	A	B	C	E	F	G	N
12	16	22	6	16	11.9	24	40
16	16	22	6	18	11.9	28.5	40
20	20	28	8	22	15.9	34.5	43
25	20	28	8	26	15.9	38.5	45
32	22	32.5	10	32.5	25.8	46.5	51
40	25	37	12	38	27.8	54	52.5
50	27	39	12	46.5	31.7	64	53.5
63	32	47	16	56.5	39.7	75	57
80	36	51.5	16	72	49.7	93	63
100	41	61	20	89	59.7	110	76
125	50	74	25	110	69.7	134	92

CB Φ32~Φ125

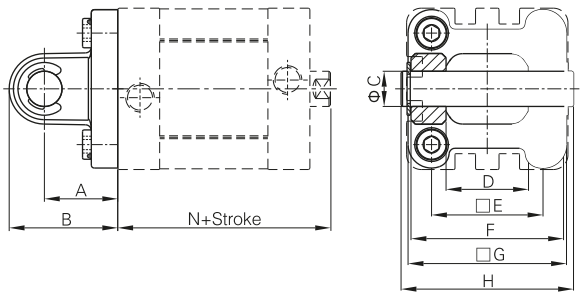

Bore size\Item	A	B	C	D	E	F	G	H	N
32	22	32.5	10	26	32.5	45	46.5	51	51
40	25	37	12	28	38	52	54	59	52.5
50	27	39	12	32	46.5	60	64	67	53.5
63	32	47	16	40	56.5	70	75	77	57
80	36	51.5	16	50	72	90	93	97	63
100	41	61	20	60	89	110	110	119	76
125	50	74	25	70	110	130	134	139	92

Note: CB is attached with relevant PIN.

CR Φ32~Φ125

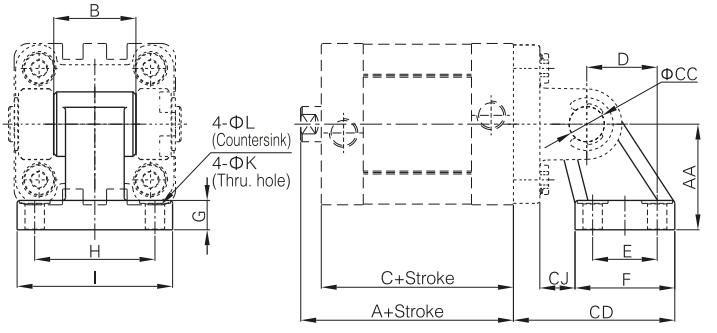

Bore size\Item	A	AA	B	C	CC	CD	CJ	D	E	F	G	H	I	K	L
32	51	32	26	44	10	50	10	21	18	31	8	38	51	6.6	11
40	52.5	36	28	45.5	12	56	12	24	22	35	10	41	54	6.6	11
50	53.5	45	32	45.5	12	68	13	33	30	45	12	50	65	9	14
63	57	50	40	49	16	77	17	37	55	50	12	52	67	9	14
80	63	63	50	54	16	93	19	47	40	60	14	66	86	11	17
100	76	71	60	67	20	106	22	55	50	70	15	76	96	11	17
125	92	90	70	81	25	135	26	70	60	90	20	94	124	14	20

Note: CR cann't be used alone, it must be used with CB.

SDB

Φ12~Φ25

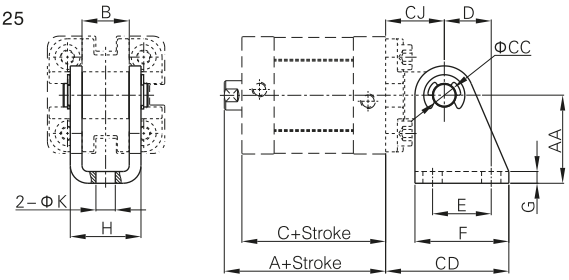

Bore size\Item	A	AA	B	C	CC	CD	CJ	D	E	F	G	H	K
12	40	27	12.1	35	6	34	16	13	15	25	2	18.1	5.5
16	40	27	12.1	35	6	34	16	13	15	25	2	18.1	5.5
20	43	30	16.1	37	8	42	20	16	20	32	2.5	24.1	6.6
25	45	30	16.1	39	8	42	20	16	20	32	2.5	24.1	6.6

Note: SDB cann't be used alone, it must be used with CA.

FTC Φ32~Φ125

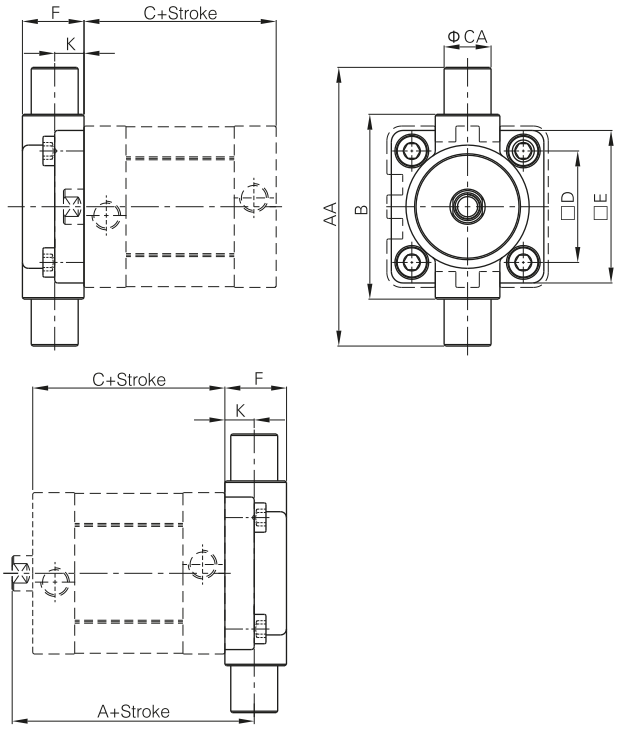

Bore size\Item	A	AA	B	C	CA	D	E	F	K
32	63	74	50	44	12	32.5	46	19	10
40	66.5	95	63	45.5	16	38	52	21	10
50	71.5	107	75	45.5	16	46.5	64	26	12
63	77	130	90	49	20	56.5	74	28	12
80	85	150	110	54	20	72	94	31	16
100	102	185	132	67	25	89	114	35	16
125	124	210	160	81	25	110	139	43	20

TCM2 Φ32~Φ125

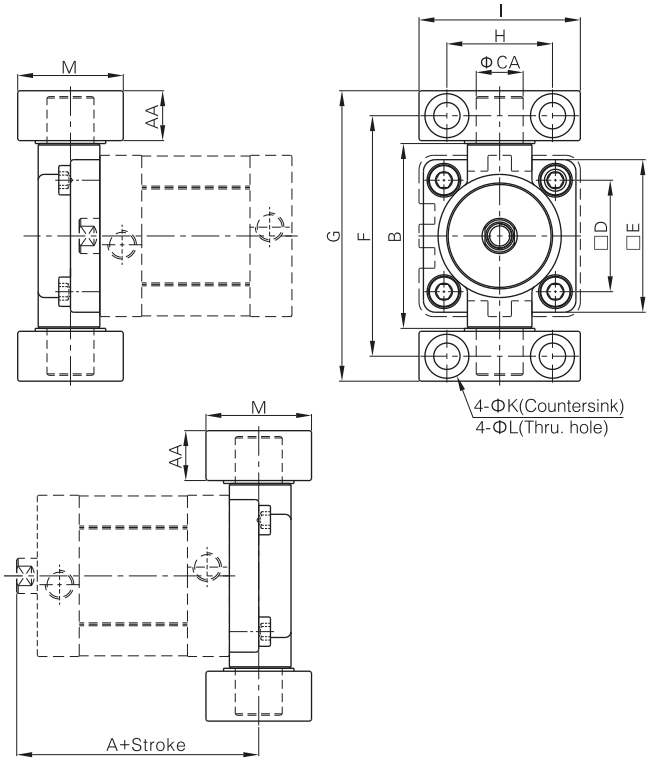

Bore size\Item	A	AA	B	CA	D	E	F	G	H	I	K	L	M
32	63	14	52	12	32.5	46	66	80	32	46	11	7	30
40	66.5	17	65	16	38	52	85	99	36	55	15	9	36
50	71.5	17	75	16	46.5	64	94	111	36	55	15	9	36
63	77	20.5	90	20	56.5	74	113.5	134	42	65	18	11	40
80	85	20.5	112	20	72	94	133.5	154	42	65	18	11	40
100	102	24.5	135	25	89	114	159.5	184	50	75	20	14	50
125	124	24.5	170	25	110	139	187.5	212	50	75	20	14	50

Note: TCM2 cann't be used alone, it must be used with FTC.
The installation position of the accessories can not be adjusted arbitrarily.

I Knuckle F-ACQ12I

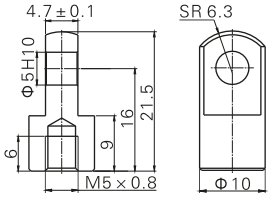

Note: Other I knuckle are common parts.

Y Knuckle F-ACQ12Y

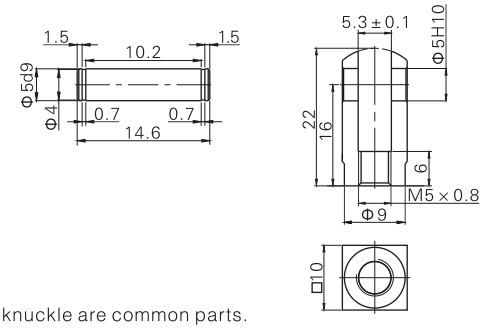

Note: Other Y knuckle are common parts.

Specifications

Bore size(mm)			6	10	16	20	25	32
Fluid			Air (to be filtered by 40μm filter element)					
Action			Double acting Single action: spring return, spring extend					
Maximum operating pressure			0.7MPa					
Minimum operating pressure (MPa)	Double acting	Single rod	0.12	0.06	0.05			
		Double rod, non-rotating rod, air cushioning	0.15	0.10	0.08			
		Non-rotating rod, double rod	0.18	0.13	0.11			
	Single acting	Standard	0.20	0.15	0.13			
		Non-rotating rod type	0.23	0.18	0.16			
Ambient and fluid temperature			Magnetic switch: -10-60℃, non-magnetic switch: -10-70℃					
Cushion			Rubber cushion at both ends					
Piston speed (mm/s)			50~500					
Stroke length tolerance (mm)			$^{+1.0}_{0}$					
Lubrication Note)			Not required (Non-lube)					
Installation form			Free (multifaceted installation)					
Non-rotation accuracy of piston rod			±0.8°			±0.5°		
Port size			M5×0.8					1/8"

Note: If lubrication is required, please use turbine No.1 oil ISO VG32.

Symbol

Double acting

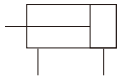

Non-rotating rod type

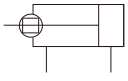

Spring return

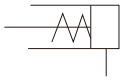

Spring extend

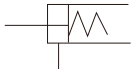

Ordering code

N C D U K 6 □ – 30 D – M9N □

Built in magnetic ring

Blank	No built-in magnetic ring
D	Built in magnetic ring

Mounting type

Blank	Basic type
K	Non-rotating rod
W	Double rod
KW	Non-rotating rod, double rod

* Single acting cylinder and long stroke double acting cylinder have no W and KW types.

Bore size

6	6mm
10	10mm
16	16mm
20	20mm
25	25mm
32	32mm

Stroke

Refer to stroke table for details

Action

D	Double acting
S	Single action (Spring return)
T	Single action (Spring extend)

Number of magnetic switches

Blank	2 pcs.
S	1 pc.
n	"n" pcs.

Port thread type

Mark	type	Bore size
Blank	M thread	Φ6~25
	Rc	Φ32
TN	NPT	
TF	G	

Magnetic switch type

Blank	Without magnetic switch

* Magnetic switch type refer stroke /Magnetic switch model table

Stroke/magnetic switch model table

Bore size (mm)	Standard stroke		Long stroke (Double acting)	Magnetic switch model (Direct mounting) Note)
	Double acting	Single action		
6	5,10,15, 20,25,30	5,10,15	40 50 60	M9N M9B M9P
10				
16				
20	5,10,15, 20,25,30, 40,50		60,70 80,90 100	
25				
32				

Note: The specifications and characteristics of magnetic switches can be referred to the series of magnetic switches.
Wire length representation mark: no mark-0.5m, L-3m, Z-5m,
Example: M9N, M9NL.

Adaptive installation / rectangular cylinder

Mounting Type	Axial mounting (Body tapped)	Vertical mounting (Body through-holes)	Lateral mounting (Body through-holes)
	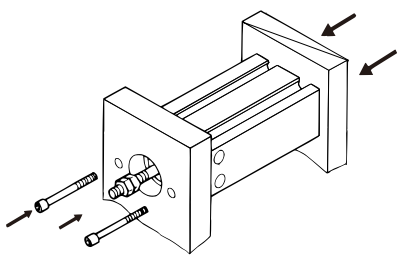	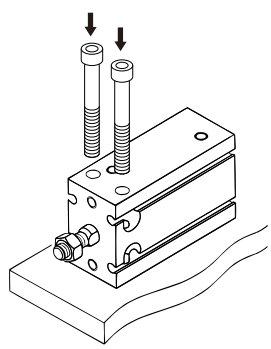	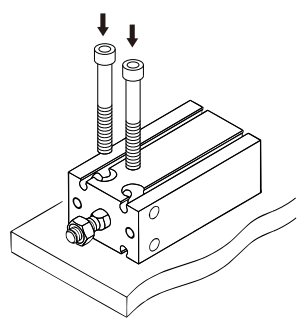

Cylinder
SC
SC(Big)
SCT
SCF
SU
SUF
SI
SIF
DNC
QGB
QGBZ
NCQ2
NCQ2(Big)
NCQ2(Long)
NCQS
NCQM
NRQ
SDA
ADVU
ACE(AND)
MAL
MA
MI
NCM2
NCJ2
NCG1
NCJP
TD
TN(TDA)
NCXS
NCXSW
NMGP
NMGG
NCU
NCUJ
NCY3B
NCY3R
NCY1S
NCY1L
STM
NMXH
NMXS
NMXQ
NMHZ2
NMHC2
NMHL2
NMHY2
NMHT2
NMHW2
NMHF2
NMHS2
NMHS3
NMHS4
NMRHQ
NMSQ
NCRA1
NCRQ2
NCRB2
ACK
SRC
QCK
NCK1

Cylinder
SC
SC(Big)
SCT
SCF
SU
SUF
SI
SIF
DNC
QGB
QGBZ
NCQ2
NCQ2(Big)
NCQ2(Long)
NCQS
NCQM
NRQ
SDA
ADVU
ACE(AND)
MAL
MA
MI
NCM2
NCJ2
NCG1
NCJP
TD
TN(TDA)
NCXS
NCXSW
NMGP
NMGG
NCU
NCUJ
NCY3B
NCY3R
NCY1S
NCY1L
STM
NMXH
NMXS
NMXQ
NMHZ2
NMHC2
NMHL2
NMHY2
NMHT2
NMHW2
NMHF2
NMHS2
NMHS3
NMHS4
NMRHQ
NMSQ
NCRA1
NCRQ2
NCRB2
ACK
SRC
QCK
NCK1

Dimensions

Basic type, built-in magnetic ring type (double-acting, single-acting spring return/extend)

Φ6, Φ10

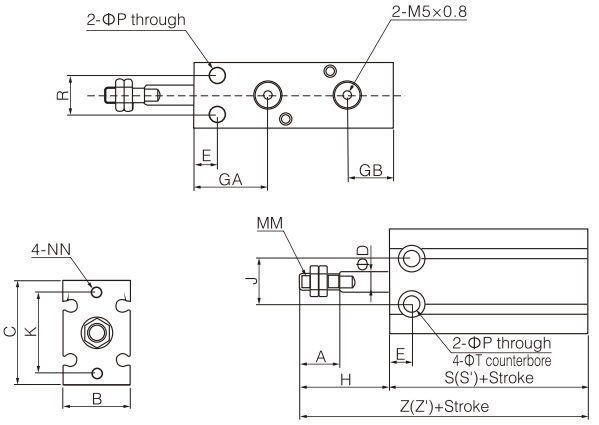

Φ16~Φ25

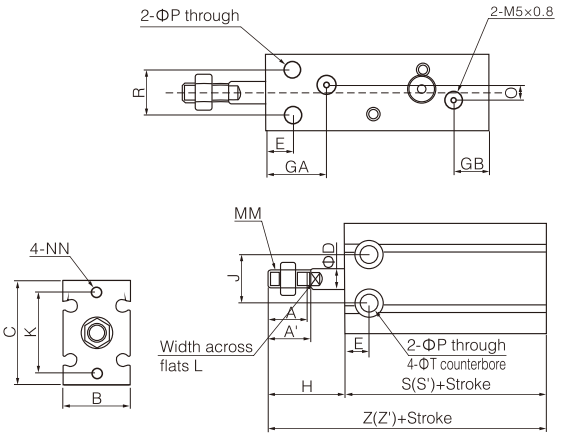

Φ32

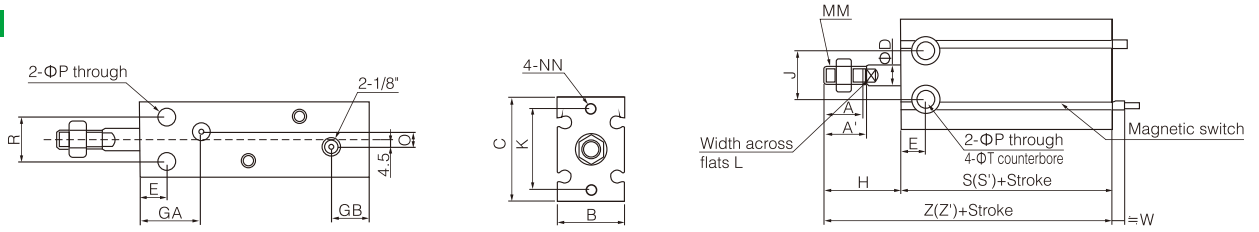

Common dimension table

Model	A	A'	B	C	ΦD	E	GA	GB	J	K	L	MM	NN	ΦP	Q	R	ΦT
NC□U6	7	-	13	22	3	7	15	10	10	17	-	M3×0.5	M3×0.5 depth 5	3.2	-	7	6 depth 4.8
NC□U10	10	-	15	24	4	7	16.5	10	11	18	-	M4×0.7	M3×0.5 depth 5	3.2	-	9	6 depth 5
NC□U16	11	12.5	20	32	6	7	16.5	11.5	14	25	5	M5×0.8	M4×0.7 depth 6	4.5	4	12	7.6 depth 6.5
NC□U20	12	14	26	40	8	9	19	12.5	16	30	6	M6×1.0	M5×0.8 depth 8	5.5	9	16	9.3 depth 8
NC□U25	15.5	18	32	50	10	10	21.5	13	20	38	8	M8×1.25	M5×0.8 depth 8	5.5	9	20	9.3 depth 9
NC□U32	19.5	22	40	62	12	11	23	13	24	48	10	M10×1.25	M6×1.0 depth 9	6.6	13.5	24	11 depth 11.5

Double acting dimension table

Model	H	Basic type		Built-in magnetic ring type		
		S	Z	W	S'	Z'
NC□U6-□D	13	33	46	2.5	33	46
NC□U10-□D	16	36	52	1	36	52
NC□U16-□D	16	30	46	0	40	56
NC□U20-□D	19	36	55	1	46	65
NC□U25-□D	23	40	63	-1	50	73
NC□U32-□D	27	42	69	-4	52	79

Single action (Spring return) dimension table

*St+Stroke

Model	H	Basic type						Built-in magnetic ring type						
		S			Z			W	S'			Z'		
		5st	10st	15st	5st	10st	15st		5st	10st	15st	5st	10st	15st
NC□U6-□S	13	38	43	48	51	56	61	2.5	38	43	48	51	56	61
NC□U10-□S	16	41	46	56	57	62	72	1	41	46	56	57	62	72
NC□U16-□S	16	35	40	50	51	56	66	0	45	50	60	61	66	76
NC□U20-□S	19	41	46	56	60	65	75	1	51	56	66	70	75	85
NC□U25-□S	23	45	50	60	68	73	83	-1	55	60	70	78	83	93
NC□U32-□S	27	47	52	62	74	79	89	-4	57	62	72	84	89	99

Single action (spring extend) dimension table

*St+Stroke

Model	H			Basic type						Built-in magnetic ring type						
				S			Z			W	S'			Z'		
	5st	10st	15st	5st	10st	15st	5st	10st	15st		5st	10st	15st	5st	10st	15st
NC□U6-□T	18	23	28	38	43	48	56	66	76	2.5	38	43	48	56	66	76
NC□U10-□T	21	26	31	41	46	56	62	72	87	1	41	46	56	62	72	87
NC□U16-□T	21	26	31	45	50	60	66	76	91	0	45	50	60	66	76	91
NC□U20-□T	24	29	34	41	46	56	65	75	90	1	51	56	66	75	85	100
NC□U25-□T	28	33	38	45	50	60	73	83	98	-1	55	60	70	83	93	108
NC□U32-□T	32	37	42	47	52	62	79	89	104	-4	57	62	72	89	99	114

Non-rotating rod type, built-in magnetic ring type (double-acting, single-acting spring return/extend)

Φ6, Φ10

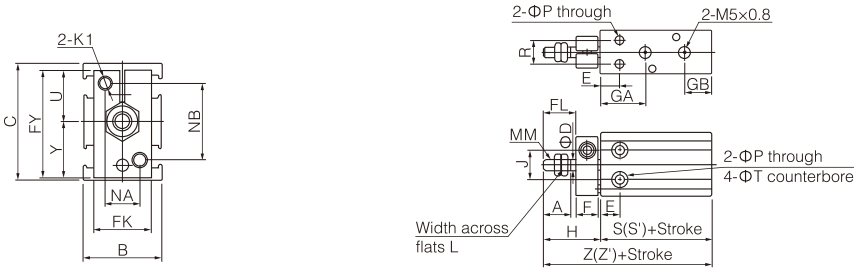

Φ16~Φ25

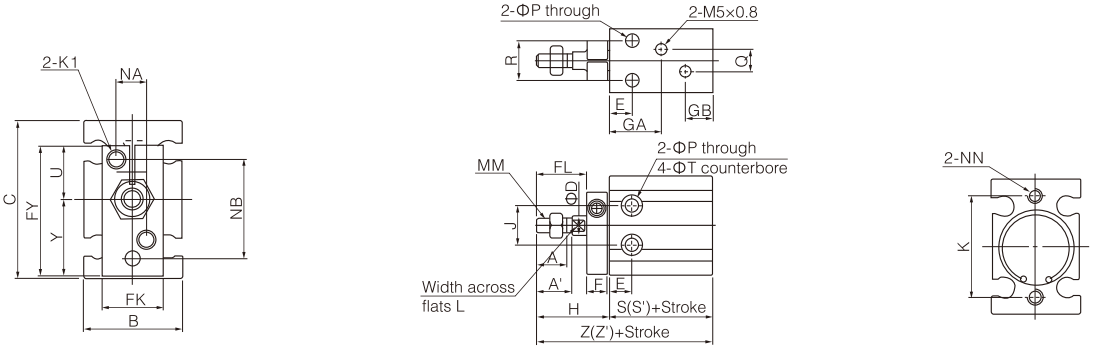

Φ32

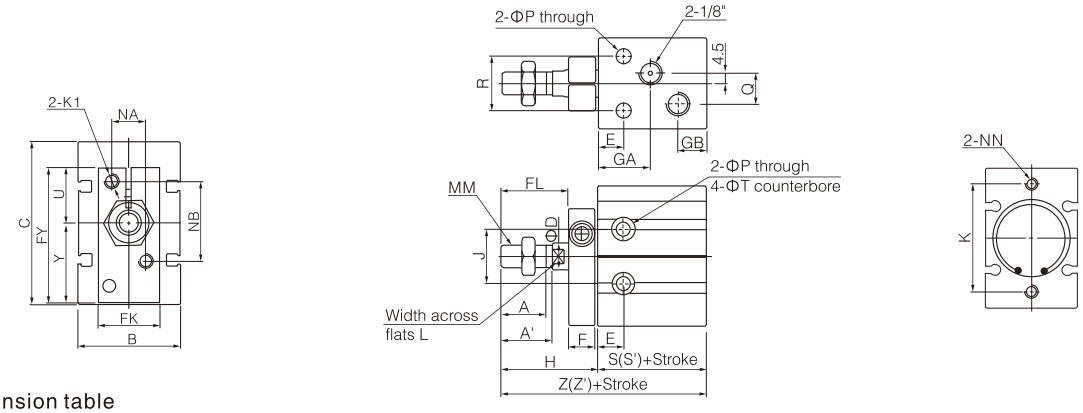

Common dimension table

Model	A	A'	B	C	ΦD	E	F	FL	FK	FY	GA	GB	H	J	K	L	MM	NA	NB	NN	ΦP	Q	R	ΦT	U	Y
NC□UK6	7	-	13	22	3	7	8	9	11	20.5	15	10	18	10	17	-	M3×0.5	6	14	M3×0.5 depth 5	3.4	-	7	6 depth 4.8	10	10.5
NC□UK10	10	-	15	24	4	7	8	12	12	22	16.5	10	21	11	18	-	M4×0.7	7	15	M3×0.5 depth 5	3.4	-	9	6 depth 5	10.5	11.5
NC□UK16	11	12.5	20	32	6	7	8	17	13	28	16.5	11.5	26	14	25	5	M5×0.8	6	18	M4×0.7 depth 6	4.5	4	12	7.6 depth 6.5	12.5	15.5
NC□UK20	12	14	26	40	8	9	8	20	16	33	19	12.5	29	16	30	6	M6×1.0	8	20	M5×0.8 depth 8	5.5	9	16	9.3 depth 8	13.5	19.5
NC□UK25	15.5	18	32	50	10	10	10	22	20	43.5	21.5	13	33	20	38	8	M8×1.25	10	28	M5×0.8 depth 8	5.5	9	20	9.3 depth 9	19	24.5
NC□UK32	19.5	22	40	62	12	11	12	29	24	51.5	23	12.5	42	24	48	10	M10×1.25	12	32	M6×1.0 depth 9	6.6	13.5	24	11 depth 11.5	21	30.5

Double acting dimension table

Model	H	Without magnetic ring		Built-in magnetic ring type		
		S	Z	W	S'	Z'
NC□UK6-□D	18	33	51	2.5	33	51
NC□UK10-□D	21	36	57	1	36	57
NC□UK16-□D	26	30	56	0	40	66
NC□UK20-□D	29	36	65	1	46	75
NC□UK25-□D	33	40	73	-1	50	83
NC□UK32-□D	42	42	84	-4	52	94

Single action (Spring return) dimension table

*St=Stroke

Model	H	Without magnetic ring						Built-in magnetic ring type								
		S			Z			W	S'			Z'		
		5st	10st	15st	5st	10st	15st		5st	10st	15st	5st	10st	15st
NC□UK6-□S	18	38	43	48	56	61	66	2.5	38	43	48	56	61	66
NC□UK10-□S	21	41	46	56	62	67	77	1	41	46	56	62	67	77
NC□UK16-□S	26	35	40	50	61	66	76	0	45	50	60	71	76	86
NC□UK20-□S	29	41	46	56	70	75	85	1	51	56	66	80	85	95
NC□UK25-□S	33	45	50	60	78	83	93	-1	55	60	70	88	93	103
NC□UK32-□S	42	47	52	62	89	94	104	-4	57	62	72	99	104	114

Single action (spring extend) dimension table

*St=Stroke

Model	H			ΦT	U	Y	Without magnetic ring						Built-in magnetic ring type							
							S			Z			W	S'			Z'		
	5st	10st	15st				5st	10st	15st	5st	10st	15st		5st	10st	15st	5st	10st	15st
NC□UK6-□T	23	28	33	6 depth 4.8	10	10.5	38	43	48	61	71	81	2.5	38	43	48	61	71	81
NC□UK10-□T	26	31	36	6 depth 5	10.5	11.5	41	46	56	67	77	92	1	41	46	56	67	77	92
NC□UK16-□T	31	36	41	7.6 depth 6.5	12.5	15.5	45	50	60	76	86	101	0	45	50	60	76	86	101
NC□UK20-□T	34	39	44	9.5 depth 8	13.5	19.5	41	46	56	75	85	100	1	51	56	66	85	95	110
NC□UK25-□T	38	43	48	9.5 depth 9	19	24.5	45	50	60	83	93	108	-1	55	60	70	93	103	118
NC□UK32-□T	47	52	57	11 depth 11.5	21	30.5	47	52	62	94	104	119	-4	57	62	72	104	114	129

Cylinder
SC
SC(Big)
SCT
SCF
SU
SUF
SI
SIF
DNC
QGB
QGBZ
NCQ2
NCQ2(Big)
NCQ2(Long)
NCQS
NCQM
NRQ
SDA
ADVU
ACE(AND)
MAL
MA
MI
NCM2
NCJ2
NCG1
NCJP
TD
TN(TDA)
NCXS
NCXSW
NMGP
NMGG
NCU
NCUJ
NCY3B
NCY3R
NCY1S
NCY1L
STM
NMXH
NMXS
NMXQ
NMHZ2
NMHC2
NMHL2
NMHY2
NMHT2
NMHW2
NMHF2
NMHS2
NMHS3
NMHS4
NMRHQ
NMSQ
NCRA1
NCRQ2
NCRB2
ACK
SRC
QCK
NCK1

Cylinder
SC
SC(Big)
SCT
SCF
SU
SUF
SI
SIF
DNC
QGB
QGBZ
NCQ2
NCQ2(Big)
NCQ2(Long)
NCQS
NCQM
NRQ
SDA
ADVU
ACE(AND)
MAL
MA
MI
NCM2
NCJ2
NCG1
NCJP
TD
TN(TDA)
NCXS
NCXSW
NMGP
NMGG
NCU
NCUJ
NCY3B
NCY3R
NCY1S
NCY1L
STM
NMXH
NMXS
NMXQ
NMHZ2
NMHC2
NMHL2
NMHY2
NMHT2
NMHW2
NMHF2
NMHS2
NMHS3
NMHS4
NMRHQ
NMSQ
NCRA1
NCRQ2
NCRB2
ACK
SRC
QCK
NCK1

Specifications

Bore size(mm)		4	6	8	10
Fluid		Air (to be filtered by 40μm filter element)			
Action		Double acting/Single action:(spring return)			
Maximum operating pressure		0.7MPa			
Minimum operating pressure (MPa)	Double acting	0.15			0.1
	Single acting	0.35	0.3		0.2
Ambient and fluid temperature		With magnetic switch: -10-60℃, Without magnetic switch: -10-70℃			
Cushion		None			
Piston speed (mm/s)		50~500			
Stroke length tolerance (mm)		$^{+0.5}_{0}$			
Lubrication Note)		Not required (Non-lube)			
Installation form		Through-hole, free (multi-faceted) installation			
Port size		M3×0.5			

Note: If lubrication is required, please use turbine No.1 oil ISO VG32.

Symbol

Double acting

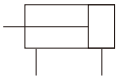

Single acting: Spring return

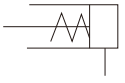

Ordering code

Basic type: **NCUJ B 4 – 6 S □**

Built-in magnetic ring: **NCDUJ B 8 – 10 D M – M9N S**

With magnetic switch

	Built in magnetic ring

Mounting type

B	Basic (Through-hole)

Bore size

4	4mm
6	6mm
8	8mm
10	40mm

*Φ4mm cylinder has no built-in magnetic ring.

Stroke

Action

D	Double acting
S	Single action (Spring return)

Rod end thread

Blank	Rod end female threaded (Without thread for Φ4)
M	Rod end male threaded

Magnetic switch type

Blank	Without magnetic switch

*Magnetic switch type refer stroke/Magnetic switch model table

Number of magnetic switches

Blank	2 pcs.
S	1 pc.
n	"n" pcs.

Stroke/magnetic switch model table

Bore size (mm)	Standard stroke		Magnetic switch model (Track installation) Note)
	Double acting	Single action	
4	4, 6, 8, 10, 15, 20	4, 6	M9N M9B M9P
6	4, 6, 8, 10, 15 20, 25, 30	4, 6, 8	
8	4, 6, 8, 10, 15 20, 25, 30	4, 6, 8, 10	
10			

Note: The specifications and characteristics of magnetic switches can be referred to the series of magnetic switches.
Wire length representation mark: no mark-0.5m, L-3m, Z-5m.

Mini free mount cylinder

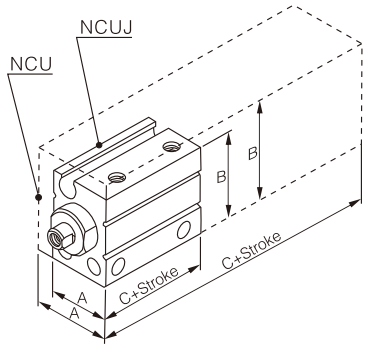

Full length: maximum reduction of about 64%.
Volume: Maximum reduction of about 70%.
(Comparing with NCU series)

Smaller size
Minimum diameter of cylinder Φ4 mm

Bore size(mm)	A	B	C
4	10	15	13
6	13(13)	19(22)	13(33)
8	13	21	13
10	13.5(15)	22(24)	13(36)

( ): The size of NCU Series in brackets

Spacing shorten
(Easy to use side by side)

Bore size(mm)	E
4	10
6	13
8	13
10	13.5

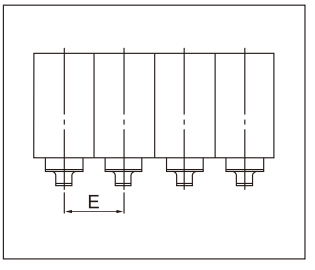

With boss (h9)
(Easy to align)

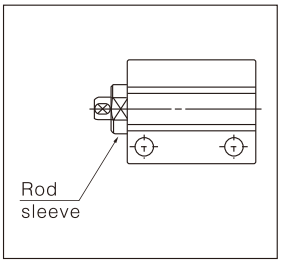

4 sides can be installed
(Easy to install)

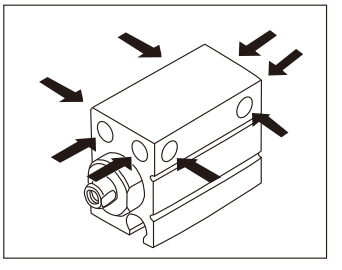

Dimensions

NCUJB4

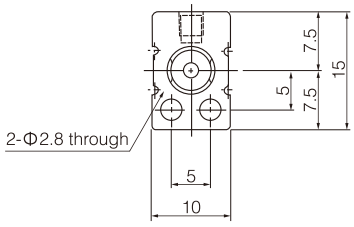

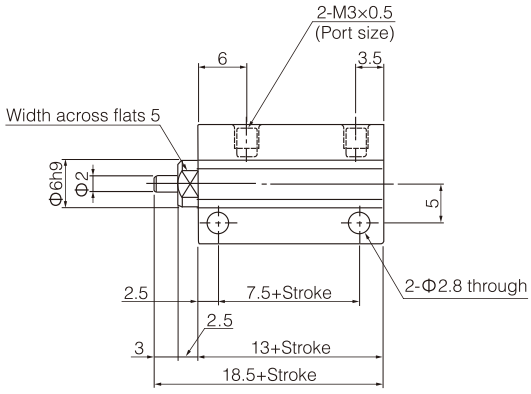

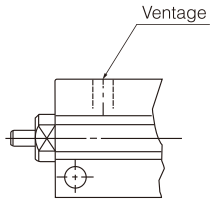

Single acting, spring return

Rod end male threaded

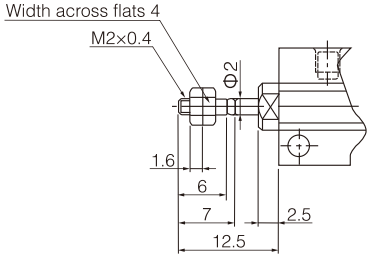

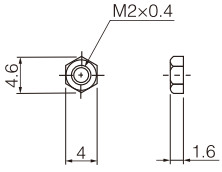

Rod end nut part no. : NTJ-004

NCUJB6・NCDUJB6

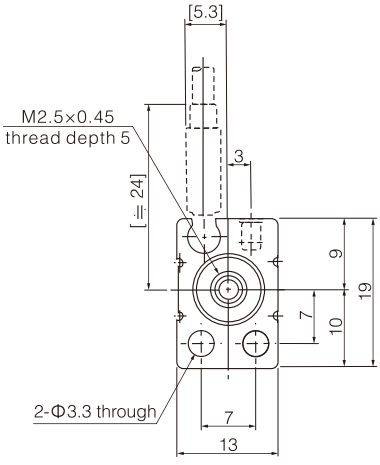

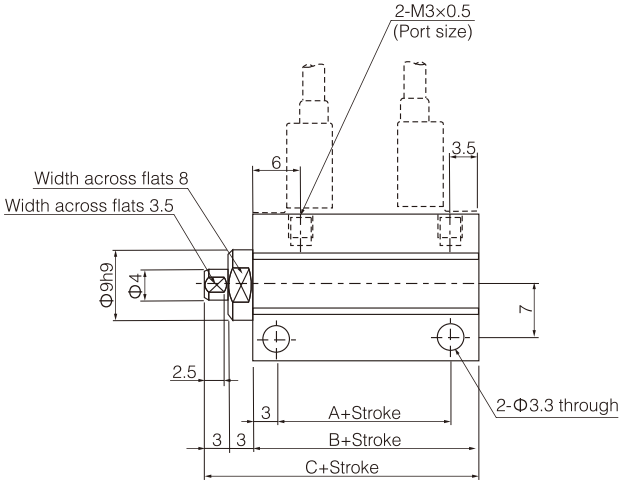

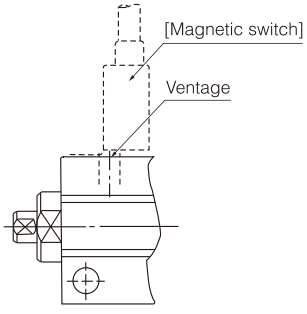

Single acting, spring return

Rod end male threaded

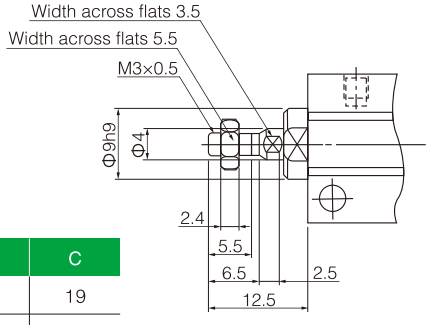

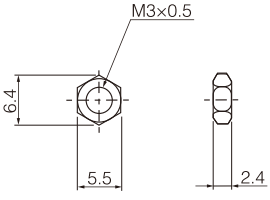

Rod end nut part no. : NTJ-006A

Model	A	B	C
NCUJB6	6.5	13	19
NCDUJB6	11.5	18	24

Cylinder
SC
SC(Big)
SCT
SCF
SU
SUF
SI
SIF
DNC
QGB
QGBZ
NCQ2
NCQ2(Big)
NCQ2(Long)
NCQS
NCQM
NRQ
SDA
ADVU
ACE(AND)
MAL
MA
MI
NCM2
NCJ2
NCG1
NCJP
TD
TN(TDA)
NCXS
NCXSW
NMGP
NMGG
NCU
NCUJ
NCY3B
NCY3R
NCY1S
NCY1L
STM
NMXH
NMXS
NMXQ
NMHZ2
NMHC2
NMHL2
NMHY2
NMHT2
NMHW2
NMHF2
NMHS2
NMHS3
NMHS4
NMRHQ
NMSQ
NCRA1
NCRQ2
NCRB2
ACK
SRC
QCK
NCK1

Cylinder
SC
SC(Big)
SCT
SCF
SU
SUF
SI
SIF
DNC
QGB
QGBZ
NCQ2
NCQ2(Big)
NCQ2(Long)
NCQS
NCQM
NRQ
SDA
ADVU
ACE(AND)
MAL
MA
MI
NCM2
NCJ2
NCG1
NCJP
TD
TN(TDA)
NCXS
NCXSW
NMGP
NMGG
NCU
NCUJ
NCY3B
NCY3R
NCY1S
NCY1L
STM
NMXH
NMXS
NMXQ
NMHZ2
NMHC2
NMHL2
NMHY2
NMHT2
NMHW2
NMHF2
NMHS2
NMHS3
NMHS4
NMRHQ
NMSQ
NCRA1
NCRQ2
NCRB2
ACK
SRC
QCK
NCK1

NCUJB8・NCDUJB8

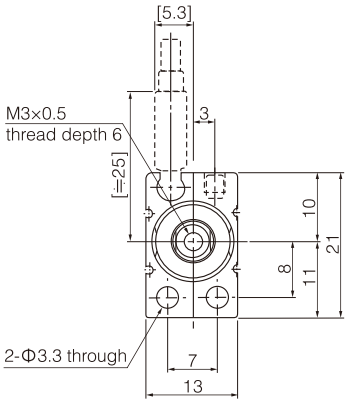

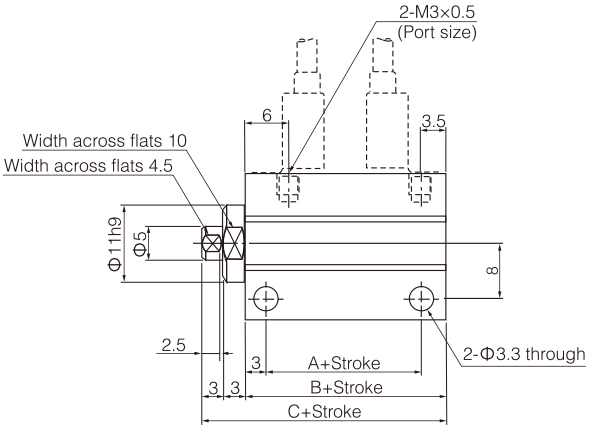

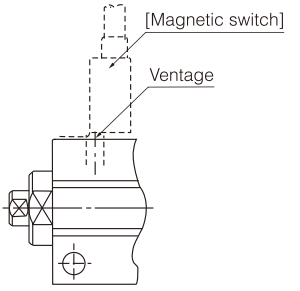

Single acting, spring return

Rod end male threaded

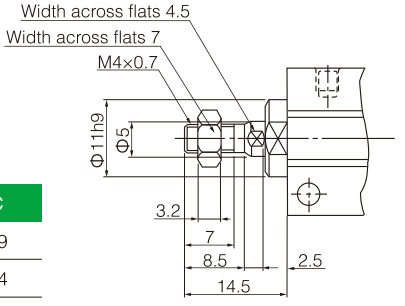

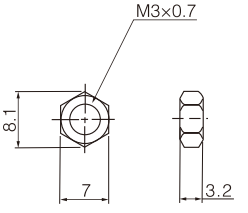

Rod end nut part no. : NTJ-010A

Model	A	B	C
NCUJB8	6.5	13	19
NCDUJB8	11.5	18	24

NCUJB10・NCDUJB10

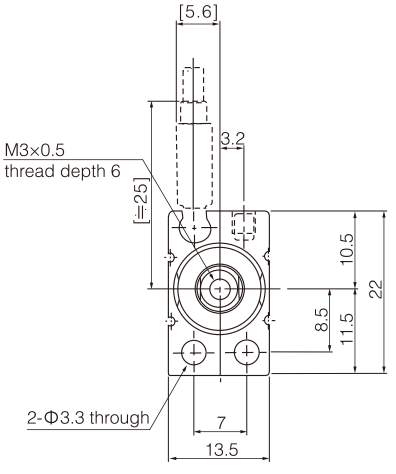

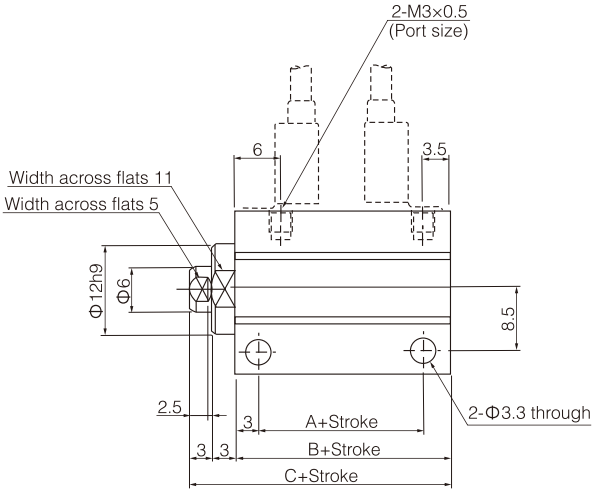

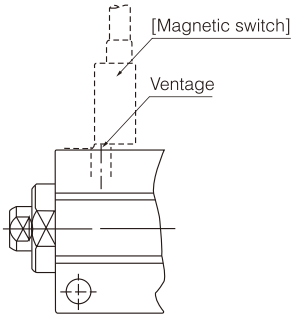

Single acting, spring return

Rod end male threaded

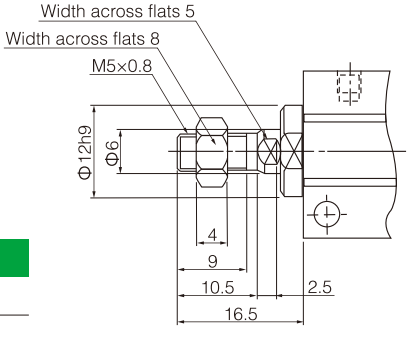

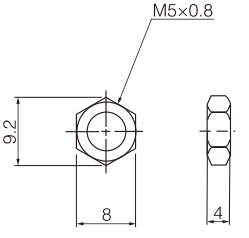

Rod end nut part no. : NTJ-015A

Model	A	B	C
NCUJB10	6.5	13	19
NCDUJB10	11.5	18	24