NMHZ2 Series
Parallel Type Pneumatic Gripper

Specifications

Bore size(mm)		6	10	16	20	25	32	40
Fluid		Air (to be filtered by 40μm filter element)						
Operating pressure (MPa)	Double acting	0.15~0.7	0.2~0.7	0.1~0.7			0.1~0.7	
	Single acting	0.3~0.7	0.35~0.7	0.25~0.7			0.25~0.7	
Ambient and fluid temperature		-10~60℃						
Repeatability (mm)		±0.01					±0.02	
Max. operating frequency (c.p.m)		180(NMHZL2 Series is 120)					60	
Lubrication		Not required						
Action		Double acting/Single acting						
Magnet switch(Options)		No contact magnetic switch (NMHZA2, NMHZAJ2 No magnetic switch)						
Pipe size		M3×0.5		M5×0.8				

Symbol

Double acting

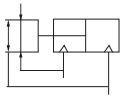

Single acting (Normally open)

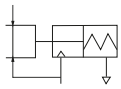

Single acting (Normally closed)

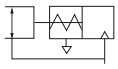

Ordering code

Parallel opening closing type **NMHZ** □ **2 – 16 D** □ □ □ **– M9PV** □

Air claw form

Blank	Standard type
A	Small-scale
AJ	Small with dust cover
L	Long stroke type
J	With dust cover type

Number of fingers

2	2 fingers

Acting type

D	Double acting
S	Single acting (Normally open)
C	Single acting (Normally closed)

Bore size

6	6mm
10	10mm
16	16mm
20	20mm
25	25mm
32	32mm
40	40mm

Small (A, AJ) type only has a bore of Φ6, Long stroke type (L form) only has a bore of Φ10~Φ25. with dust cover type (J type) only has cylinder diameter of Φ6~Φ25.

Finger position/ option Note 1)

[Standard] Blank: Basic type

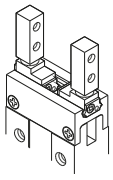

1: Side tapped mounting

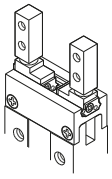

2: Through-holes in opening closing direction

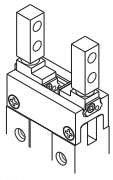

3: Flat type fingers

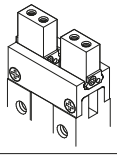

Note: NMHZAJ2 and NMHZJ2 series do not have this item.

Body option Note 2)

Blank: Basic type Note 2)

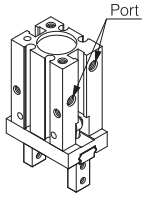

E: End boss type Side ported (Double acting Single acting)

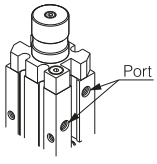

W: End boss type Note 3) Axial ported Φ4 One-touch fitting for coaxial tubing (Double acting)

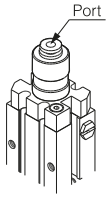

K: End boss type Axial ported with Φ4 One-touch fitting (Single acting)

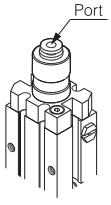

M: End boss type Axial ported with M3 port (Single acting) Note 4)

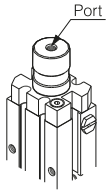

H: End boss type Axial ported with Φ4 hose nipple (Single acting) Note 5)

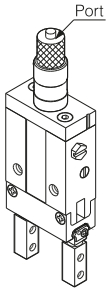

Note: 1. NMHZ2-6,32,40 do not have this item.
2. NMHA2-6 and NMHZJ2-6 are only basic types.
3. NMHZA2 and NMHZAJ2 have no "W" variety.
4. M type of NMHZAJ2-6 is M3 through port.
5. type H is only applicable to NMHZA2-6 and NMHZAJ2-6.

Magnetic switch type

Blank	Without magnetic switch

* Small (A, AJ) type without magnetic switch.

Dust cover material

Blank	Chloroprene rubber (CR)
F	Fluororubber (FKM)
S	Silicone rubber (SI)

* This item is only available in NMHZAJ2 and NMHZJ2 series.

Number of magnetic switches

Blank	2 pcs.
S	1 pc.

Model of commonly used magnetic switch

M9N, M9NV, M9P, M9PV, M9B, M9BV

* Behind the magnetic switch model, Wire length representation mark: no mark: -0.5m, L-3m, Z-5m.

Clamping force

Small air claw

Action		Model	Gripping force per finger Effective value (N) External	Gripping force per finger Effective value (N) Internal	Opening/Closing (Both sides) (mm)
Double acting		NMHZA2-6D	3.3	6.1	4
		NMHZAJ2-6D			
Single acting	Normally open	NMHZA2-6S	1.9	-	4
		NMHZAJ2-6S			
	Normally closed	NMHZA2-6C	-	3.7	4
		NMHZAJ2-6C			

Standard air claw

Action		Model	Gripping force per finger Effective value (N) External	Gripping force per finger Effective value (N) Internal	Opening/Closing (Both sides) (mm)
Double acting		NMHZ2-6D	3.3	6.1	4
		NMHZ2-10D	11	17	4
		NMHZ2-16D	34	45	6
		NMHZ2-20D	42	66	10
		NMHZ2-25D	65	104	14
		NMHZ2-32D	158	193	22
		NMHZ2-40D	254	318	30
Single acting	Normally open	NMHZ2-6S	1.9	-	4
		NMHZ2-10S	7.1		4
		NMHZ2-16S	27		6
		NMHZ2-20S	33		10
		NMHZ2-25S	45		14
		NMHZ2-32S	131		22
		NMHZ2-40S	217		30
	Normally closed	NMHZ2-6C	-	3.7	4
		NMHZ2-10C		13	4
		NMHZ2-16C		38	6
		NMHZ2-20C		57	10
		NMHZ2-25C		83	14
		NMHZ2-32C		161	22
		NMHZ2-40C		267	30

Long stroke type air claw

Action		Model	Gripping force per finger Effective value (N) External	Gripping force per finger Effective value (N) Internal	Opening/Closing (Both sides) (mm)
Double acting		NMHZL2-10D	11	17	8
		NMHZL2-16D	34	45	12
		NMHZL2-20D	42	66	18
		NMHZL2-25D	65	104	22
Single acting	Normally open	NMHZL2-10S	7.1	-	8
		NMHZL2-16S	27		12
		NMHZL2-20S	33		18
		NMHZL2-25S	50		22
	Normally closed	NMHZL2-10C	-	13	8
		NMHZL2-16C		38	12
		NMHZL2-20C		57	18
		NMHZL2-25C		85	22

With dust cover type air claw

Action		Model	Gripping force per finger Effective value (N) External	Gripping force per finger Effective value (N) Internal	Opening/Closing (Both sides) (mm)
Double acting		NMHZJ2-6D	3.3	6.1	4
		NMHZJ2-10D	9.8	17	4
		NMHZJ2-16D	30	40	6
		NMHZJ2-20D	42	66	10
		NMHZJ2-25D	65	104	14
Single acting	Normally open	NMHZJ2-6S	1.9	-	4
		NMHZJ2-10S	6.3		4
		NMHZJ2-16S	24		6
		NMHZJ2-20S	28		10
		NMHZJ2-25S	45		14
	Normally closed	NMHZJ2-6C	-	3.7	4
		NMHZJ2-10C		12	4
		NMHZJ2-16C		31	6
		NMHZJ2-20C		56	10
		NMHZJ2-25C		83	14

Dimensions

NMHZ2-6□

Double acting/Single acting

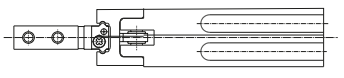

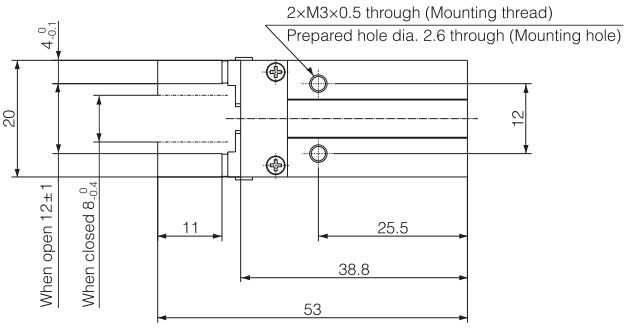

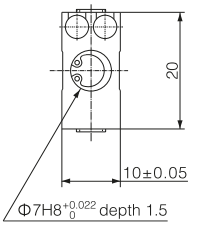

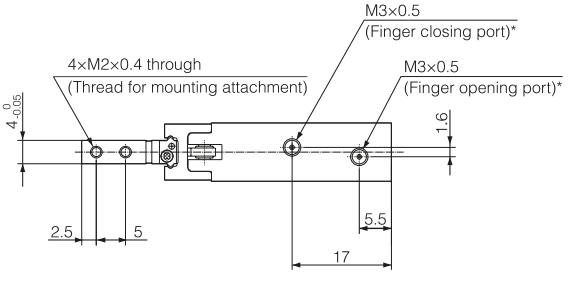

Magnetic switch mounting slot size

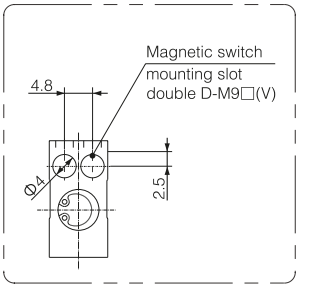

* For single action, the port on one side is a breathing hole.

NMHZ2-□□

Double acting/Single acting

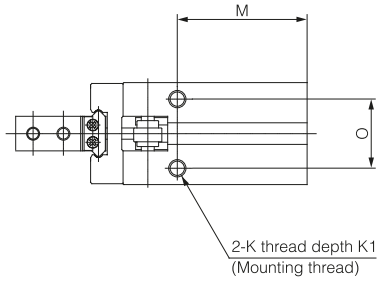

Magnetic switch mounting groove dimensions

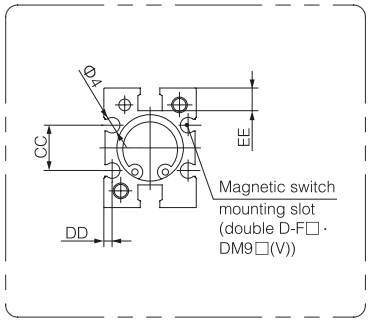

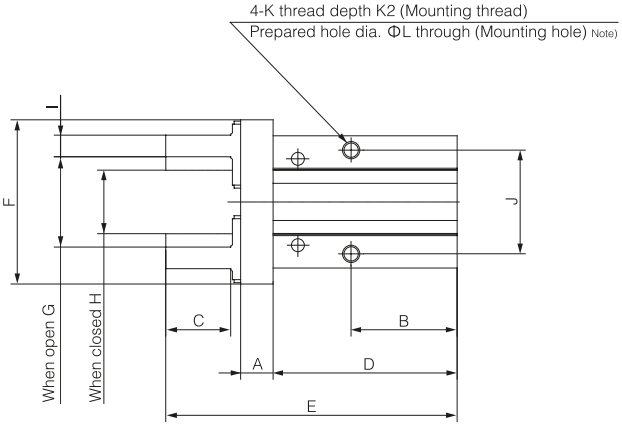

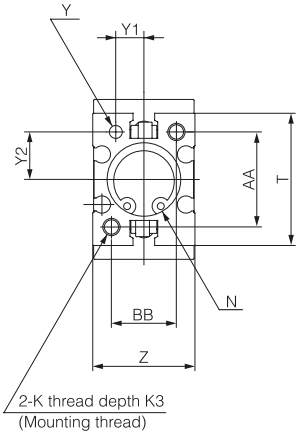

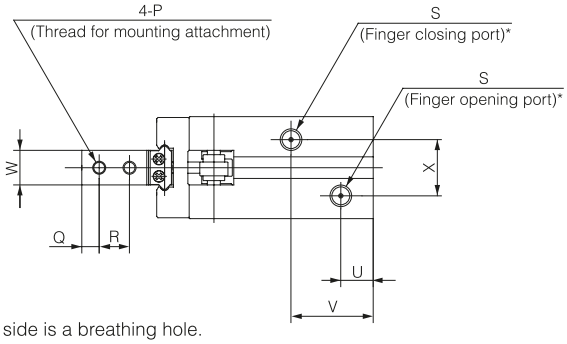

* For single action, the port on one side is a breathing hole.

Bore size (mm)	A	B	C	D	E	F	G	H	I	J	K	K1	K2	K3	ΦL	M	N	O	P	Q	R	Z
10	6	23	12	37.8	57	29	$15.2^{+2.2}_{0}$	$11.2^{0}_{-0.7}$	$4^{0}_{-0.1}$	16	M3×0.5	6	5.5	6	2.6	27	$\Phi 11H9^{+0.043}_{0}$deep 2	11.4	M2.5×0.45	3	5.7	M3×0.5
16	7.5	24.5	15	42.5	67.3	38	$20.9^{+2.2}_{0.2}$	$14.9^{0}_{-0.7}$	$5^{0}_{-0.1}$	24	M4×0.7	4.5	8	8	3.4	30	$\Phi 17H9^{+0.043}_{0}$deep 2	16	M3×0.5	4	7	M5×0.8
20	9.5	29	20	52.8	84.8	50	$26.3^{+2.2}_{0.2}$	$16.3^{0}_{-0.7}$	$8^{0}_{-0.1}$	30	M5×0.8	8	10	10	4.3	35	$\Phi 21H9^{+0.052}_{0}$deep 3	18.6	M4×0.7	5	9	M5×0.8
25	11	30	25	63.6	102.7	63	$33.3^{+2.5}_{0.2}$	$19.3^{0}_{-0.8}$	$10^{0}_{-0.1}$	36	M6×1	10	12	12	5.1	36.5	$\Phi 26H9^{+0.052}_{0}$deep 3.5	22	M5×0.8	6	12	M5×0.8
32	12	40(49)	29	67(76)	113(122)	97	$48^{+2.5}_{0}$	$26^{0}_{-0.5}$	$12^{0}_{-0.1}$	46	M6×1	10	13	13	5.1	48(57)	$\Phi 34H9^{+0.062}_{0}$deep 4	26	M6×1	7	14	M5×0.8
40	15	49(62)	36	83(96)	139(152)	119	$60^{+2.7}_{0}$	$30^{0}_{-0.5}$	$14^{0}_{-0.1}$	56	M8×1.25	13	16	17	6.6	58(71)	$\Phi 42H9^{+0.062}_{0}$deep 4	32	M8×1.25	9	17	M5×0.8

Bore size (mm)	T	U	V	W	X	Y	Z	Y1	Y2	AA	BB	CC	DD	EE
10	23	9	19	$5^{0}_{-0.05}$	11	$\Phi 2H9^{+0.025}_{0}$depth 3	16.4±0.05	5.2±0.02	7.6±0.02	18	12	-	-	5.4
16	30.6	7.5	19	$8^{0}_{-0.05}$	13	$\Phi 3H9^{+0.025}_{0}$depth 3	23.6±0.05	6.5±0.02	11±0.02	22	15	11.6	2.1	5.8
20	42	10	23	$10^{0}_{-0.05}$	15	$\Phi 4H9^{+0.03}_{0}$ depth 4	27.6±0.05	7.5±0.02	16.8±0.02	32	18	14	2.1	9
25	52	10.7	23.5	$12^{0}_{-0.05}$	20	$\Phi 4H9^{+0.03}_{0}$ depth 4	33.6±0.05	10±0.02	21.8±0.02	40	22	19	3.5	11.5
32	60	11	31(37)	$15^{0}_{-0.05}$	24	$\Phi 5H9^{+0.03}_{0}$ depth 5	40±0.1	12±0.02	23±0.02	46	26	24	3.3	11.5
40	72	12	38(45)	$18^{0}_{-0.05}$	28	$\Phi 5H9^{+0.03}_{0}$ depth 5	48±0.1	14±0.02	29±0.02	56	32	29.4	3.7	13

NMHZ J2-6□

Double acting/Single acting

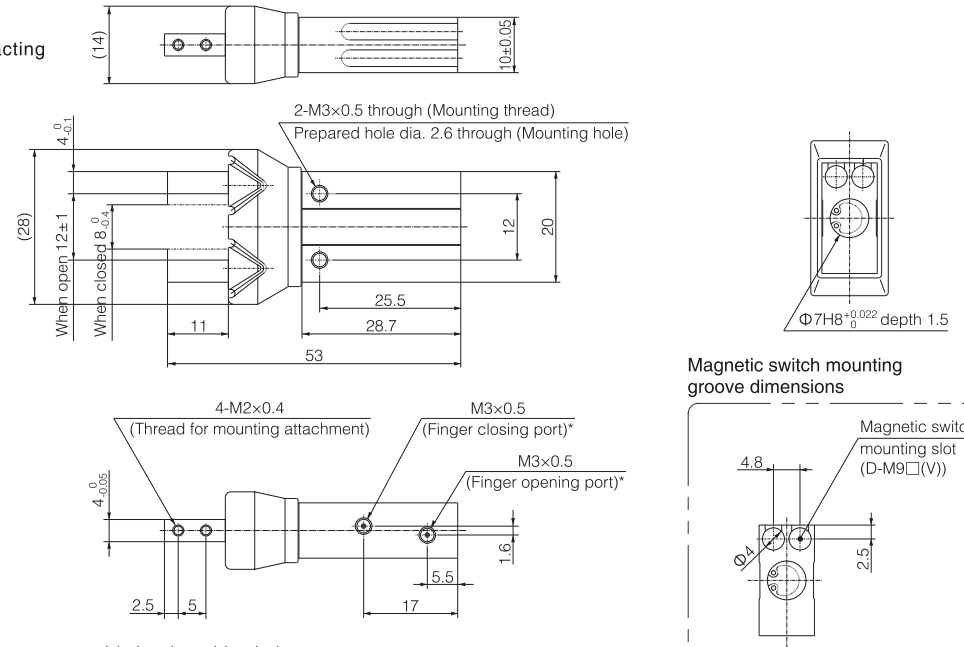

Magnetic switch mounting groove dimensions

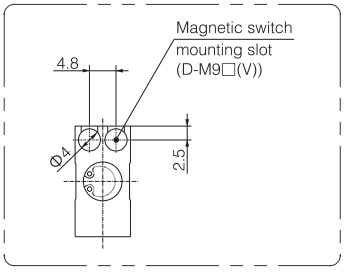

* For single action, the port on one side is a breathing hole.

NMHZ J2-□□

Double acting/Single acting

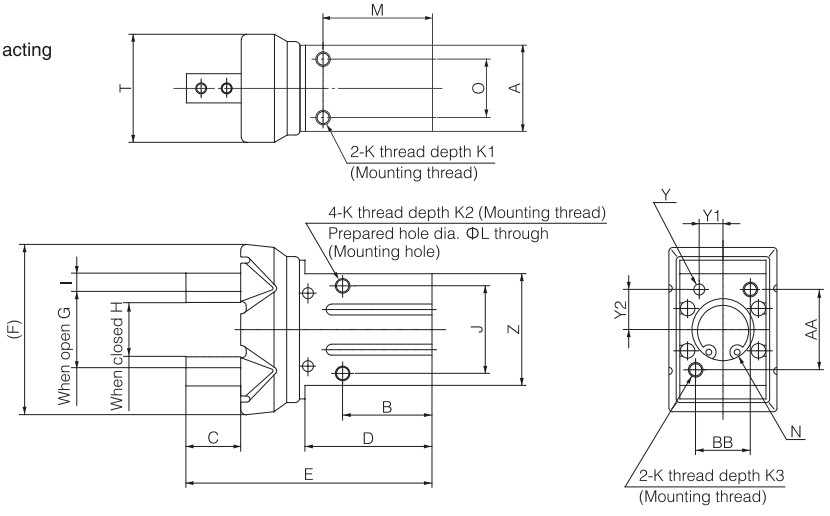

Magnetic switch mounting groove dimensions

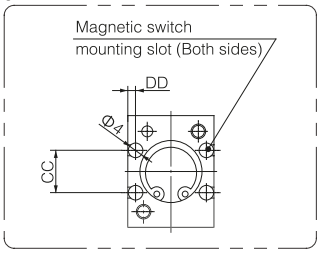

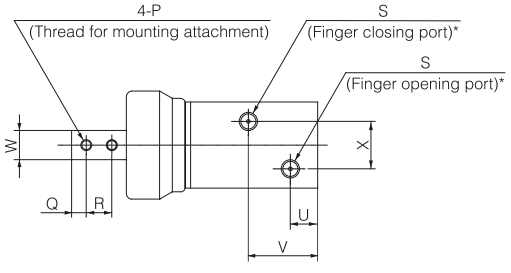

* For single action, the port on one side is a breathing hole.

Bore size(mm)	A	B	C	D	E	F	G	H	I	J	K	K1	K2	K3	ΦL	M	N	O
10	16.4±0.05	23	12	31	57	34	$15.2^{+2.2}_{0}$	$11.2^{0}_{-0.7}$	$4^{0}_{-0.1}$	16	M3×0.5	6	5.5	6	2.6	27	Φ11H9 $^{+0.043}_{0}$ depth 2	11.4
16	23.6±0.05	24.5	15	34.8	67.3	45	$20.9^{+2.2}_{-0.2}$	$14.7^{0}_{-0.7}$	$5^{0}_{-0.1}$	24	M4×0.7	4.5	8	8	3.4	30	Φ17H9 $^{+0.043}_{0}$ depth 2	16
20	27.6±0.05	29	20	43.5	84.8	58	$26.3^{+2.2}_{-0.2}$	$16.3^{0}_{-0.7}$	$8^{0}_{-0.7}$	30	M5×0.8	8	10	10	4.3	35	Φ21H9 $^{+0.052}_{0}$ depth 2	18.6
25	33.6±0.05	30	25	53	102.7	73	$33.3^{+2.5}_{-0.2}$	$19.3^{0}_{-0.8}$	$10^{0}_{-0.8}$	36	M6×1	10	12	12	5.1	36.5	Φ26H9 $^{+0.052}_{0}$ depth 2	22

Bore size(mm)	P	Q	R	S	T	U	V	W	X	Y	Y1	Y2	Z	AA	BB	CC	DD
10	M2.5×4.5	3	5.7	M3×0.5	21	7	19	$5^{0}_{-0.05}$	11	Φ2H9 $^{+0.025}_{0}$ depth 3	5.2±0.02	7.6±0.02	23	18	12	-	2.5
16	M3×0.5	4	7	M5×0.8	29.6	7.5	19	$8^{0}_{-0.05}$	13	Φ3H9 $^{+0.025}_{0}$ depth 3	6.5±0.02	11±0.02	30.6	22	15	11.6	2.1
20	M4×0.7	5	9	M5×0.8	34.5	8.5	23	$10^{0}_{-0.05}$	15	Φ4H9 $^{+0.03}_{0}$ depth 4	7.5±0.02	16.8±0.02	42	32	18	14	2.1
25	M5×0.8	6	12	M5×0.8	42	9	24	$12^{0}_{-0.05}$	20	Φ4H9 $^{+0.03}_{0}$ depth 4	10±0.02	21.8±0.02	52	40	22	19	3.5

Specifications

Bore size(mm)		6	7	10	16	20	25
Fluid		Air (to be filtered by 40μm filter element)					
Operating pressure (MPa)	Double acting	0.15~0.6	0.4~0.6	0.25~0.6			
	Single acting	0.3~0.6	0.1~0.6				
Ambient and fluid temperature		-10~60℃					
Max. operating frequency (c.p.m)		180 c.p.m					
Repeatability (mm)		±0.02		±0.01			
Lubrication		Not required					

Symbol

Double acting

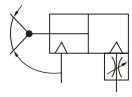

Single acting

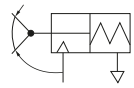

Ordering code

Standard type **NMHC2 – 20 D – Y59A** □

Fulcrum open close type

Bore size

10	10mm
16	16mm
20	20mm
25	25mm

Acting type

D	Double acting
S	Single acting (Normally open)

Magnetic switch model

Blank	Without magnetic switch

* See the following table for the model of magnetic switch

Number of magnetic switches

Blank	2 pcs.
S	1 pc.

Magnetic switch model

Bore size (mm)	Magnetic switch model
Φ6	M9N(V), M9B(V), M9P(V)
Φ10~25	

* Behind the magnetic switch model, Wire length representation mark: no mark-0.5m, L-3m, Z-5m. Example: M9NL.

Clamping torque

Action	Model	Bore size (mm)	Gripping moment (N·m)	Opening/Closing angle (Both sides)
Double acting	NMHC2-10D	10	0.1	30°~-10°
	NMHC2-16D	16	0.39	
	NMHC2-20D	20	0.70	
	NMHC2-25D	25	1.36	
Single acting	NMHCM2-7S	7	0.017	20°~-7°
	NMHC2-10S	10	0.07	30°~-10°
	NMHC2-16S	16	0.31	
	NMHC2-20S	20	0.54	
	NMHC2-25S	25	1.08	

Dimensions

Double acting: Φ6~Φ25

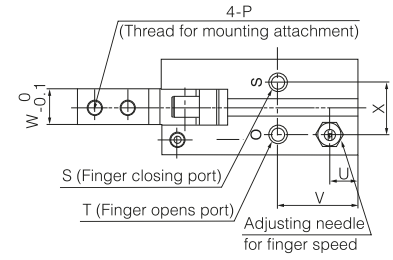

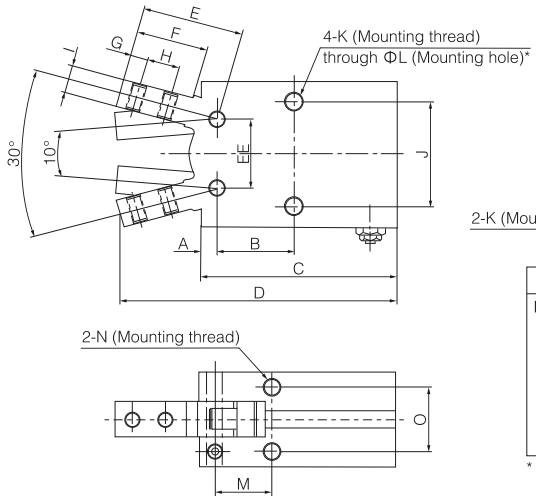

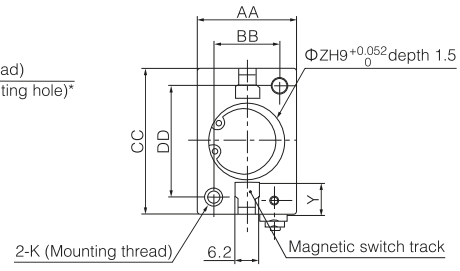

Single acting: Φ10~25

Normally open

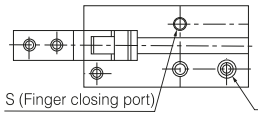

* If the magnetic switch is installed, the ΦL mounting hole cannot be used.

Bore size (mm)	A	B	C	D	E	F	G	H	I	J	K	L	M	N	O	P	Port size S	Port size T	U	V	W	X	Y	Z	AA	BB	CC	DD	EE
6	4	6	29	41	16	11	2.5	5	2	12	M3x0.5 Through hole	2.6	-	M2x0.4 depth 4	5	M2x0.4	M3x0.5		-	-	4	2.1	-	7	10	4	20	13.6	14
10	2.8	12.8	38.6	52.4	17.2	12	3	5.7	4	16	M3x0.5 depth 5	2.6	8.8	M3x0.5 depth 6	11.4	M2.5x0.45	M3x0.5		7.2	18.8	6.4	0.4	5.4	11	16.4	12	23	18	10
16	3.9	16.2	44.6	62.5	22.6	16	4	7	7	24	M4x0.7 depth 8	3.4	10.7	M4x0.7 depth 8	16	M3x0.5	M5x0.8		7	18.3	8	13	5.8	17	23.6	15	30.6	22	16
20	4.5	21.7	55.2	78.7	28	20	5.2	9	8	30	M5x0.8 depth 10	4.3	15.7	M5x0.8 depth 8	18.6	M4x0.7	M5x0.8		7.5	22.2	10	15	9	21	27.6	18	42	32	20
25	4.6	25.8	60.2	92	37.5	27	8	12	10	36	M6 depth 12	5.1	19.3	M6 depth 10	22	M5 depth 0.8	M5x0.8		7.7	23.5	12	20	11.5	26	33.6	22	52	40	25

NMHL2 Series
Parallel Type Pneumatic Gripper (Wide Type)

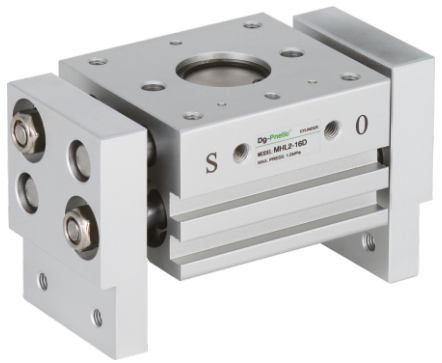

1. Long finger stroke, suitable for holding large objects
2. Double piston design to increase retention
3. Gear rack operation is adopted to make fingers open and close synchronously
4. Dust proof design due to special seals

Specifications

Bore size(mm)	10	16	20	25	32	40
Fluid	Air (to be filtered by 40μm filter element)					
Action	Double acting					
Maximum service pressure(MPa)	0.6					
Minimum service pressure(MPa)	0.15	0.1				
Ambient and fluid temperature	-10~60℃					
Repeatability (mm)	±0.01					
Effective gripping force (N)	14	45	74	131	228	396
Port size	M5×0.8				Rc1/8	

Note: Under the pressure of 0.5MPa and the distance between clamping points is 40mm(Φ10~Φ25), 80mm(Φ32/Φ40).

Symbol

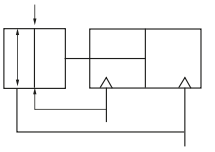

Ordering code

Standard type **NMHL 2 – 16 D 1 – Y59A** □

Number of fingers

2	2 fingers

Bore size

10	10mm
16	16mm
20	20mm
25	25mm
32	32mm
40	40mm

Acting type

D	Double acting

Opening/Closing stroke

Bore size	Φ10	Φ16	Φ20	Φ25	Φ32	Φ40
Blank	20	30	40	50	70	100
1	40	60	80	100	120	160
2	60	80	100	120	160	200

Magnetic switch model

Blank	Without magnetic switch

* Behind the magnetic switch model, Wire length representation mark: no mark: -0.5m, L-3m.
Example: Y59A, Y59AL.

Number of magnetic switches

Blank	2 pcs.
S	1 pc.

Stroke

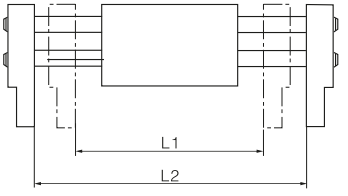

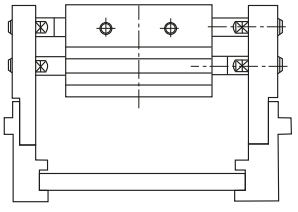

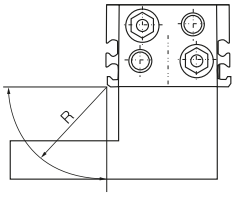

R: Gripping position (mm)

Model	Bore size (mm)	Max. operating frequency c.p.m	Opening/Closing stroke (mm) (L2-L1)	Width at closing (mm) (L1)	Width at opening (mm) (L2)
NMHL2-10D	10	60	20	56	76
NMHL2-10D1		40	40	78	118
NMHL2-10D2			60	96	156
NMHLL2-16D	16	60	30	68	98
NMHL2-16D1		40	60	110	170
NMHL2-16D2			80	130	210
NMHL2-20D	20	60	40	82	122
NMHL2-20D1		40	80	142	222
NMHL2-20D2			100	162	262
NMHL2-25D	25	60	50	100	150
NMHL2-25D1		40	100	182	282
NMHL2-25D2			120	200	320
NMHL2-32D	32	30	70	150	220
NMHL2-32D1		20	120	198	318
NMHL2-32D2			160	242	402
NMHL2-40D	40	30	100	188	288
NMHL2-40D1		20	160	246	406
NMHL2-40D2			200	286	486

Dimensions

NMHL2-10D□

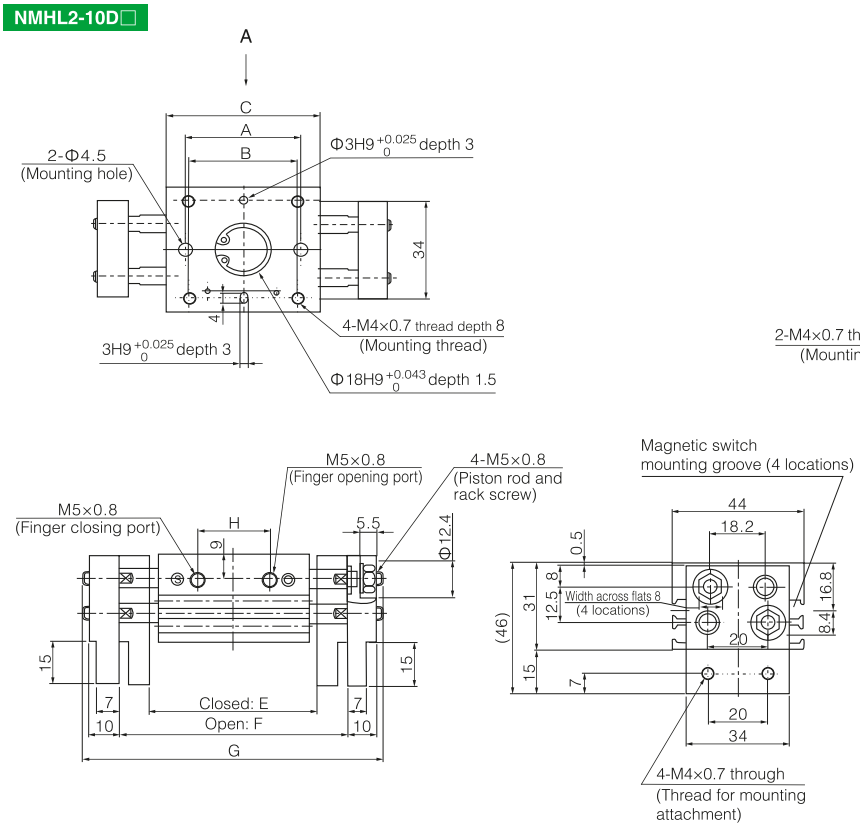

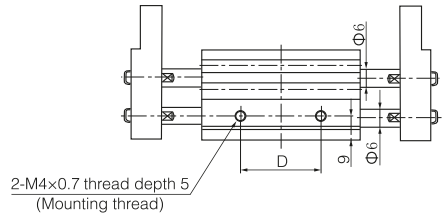

A direction view

Model	A	B	C	D	E	F	G	H
NMHL2-10D	38	36	51	26	56	76	100	24
NMHL2-10D1	54	52	67	42	78	118	142	39
NMHL2-10D2	72	70	85	60	96	156	180	57

NMHL2-16D□

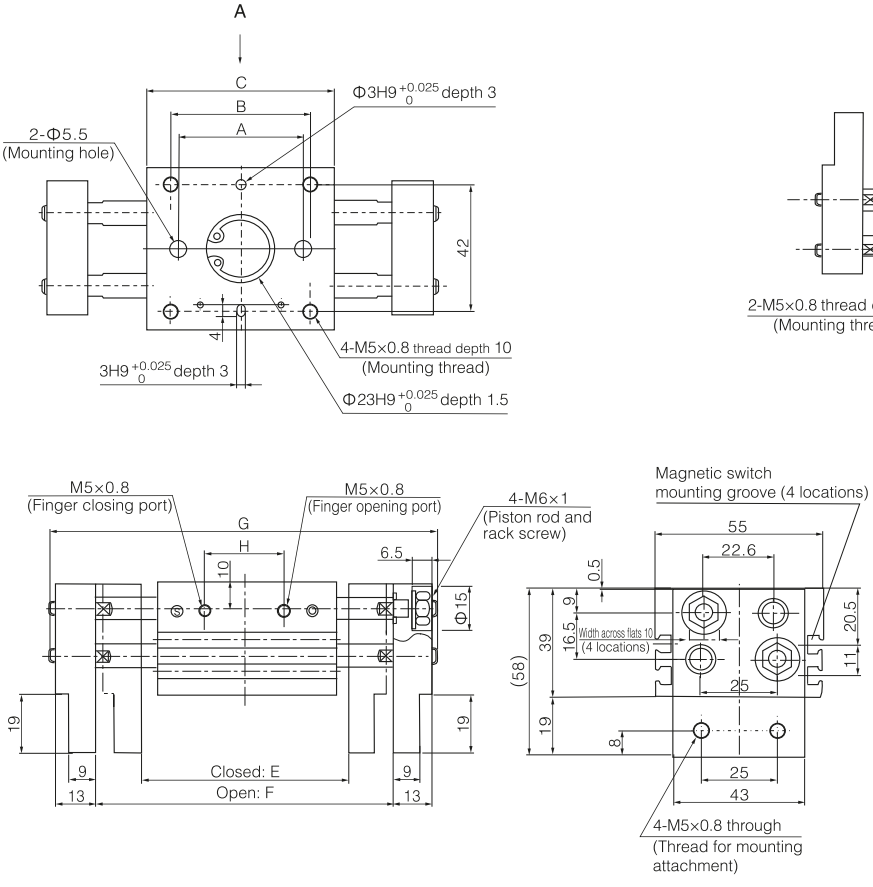

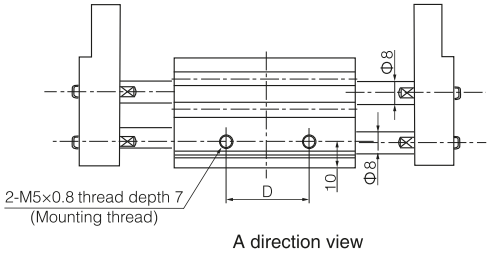

A direction view

Model	A	B	C	D	E	F	G	H
NMHL2-16D	40	45	60	28	68	98	128	26
NMHL2-16D1	70	75	90	58	110	170	200	50
NMHL2-16D2	90	90	110	78	130	210	240	70

NMHL2-20D□

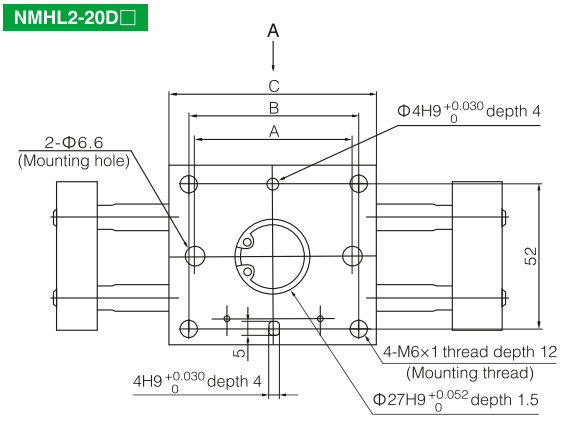

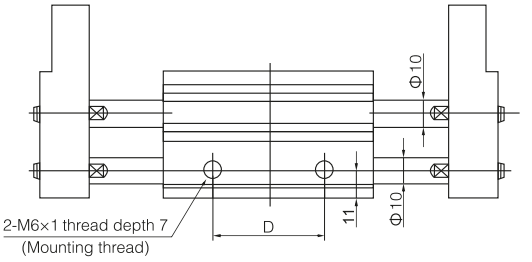

A direction view

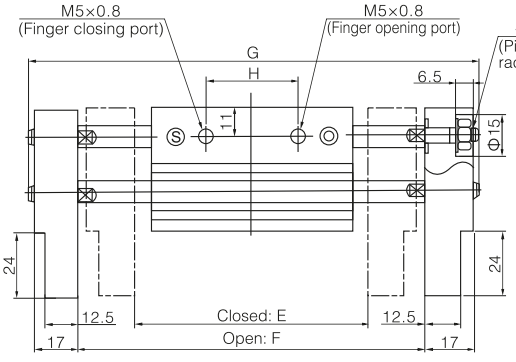

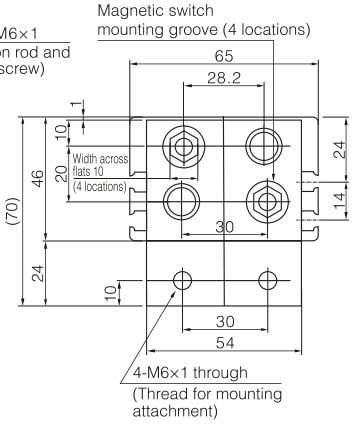

Model	A	B	C	D	E	F	G	H
NMHL2-20D	54	58	71	38	82	122	160	32
NMHL2-20D1	96	100	113	80	142	222	260	68
NMHL2-20D2	116	120	133	100	162	262	300	88

NMHL2-25D□

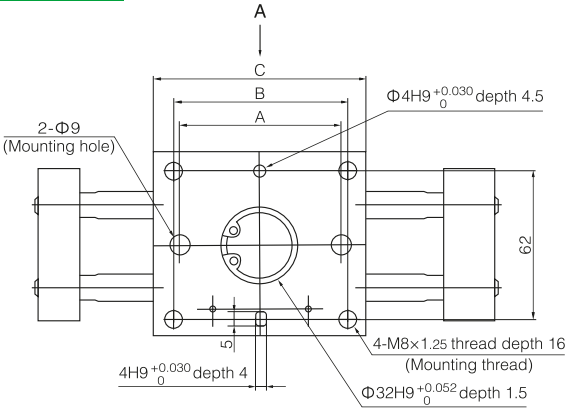

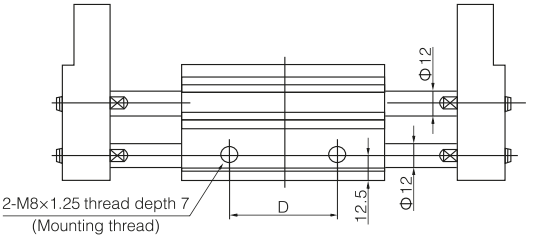

A direction view

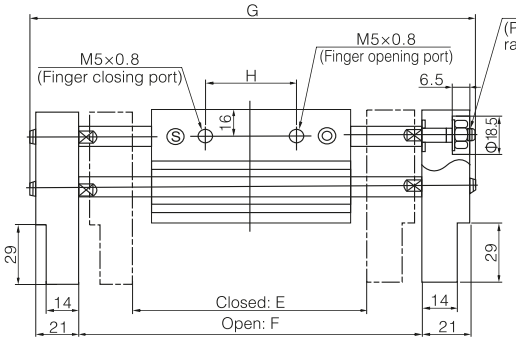

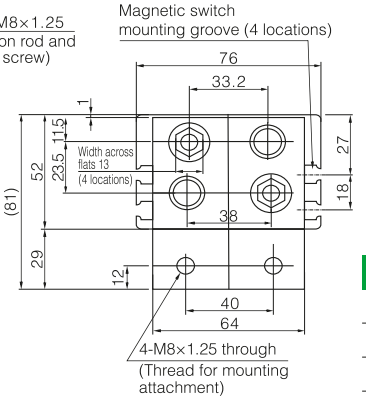

Model	A	B	C	D	E	F	G	H
NMHL2-25D	66	70	88	48	100	150	196	36
NMHL2-25D1	120	124	142	102	182	282	328	86
NMHL2-25D2	138	142	160	120	200	320	366	104

NMHL2-32D□

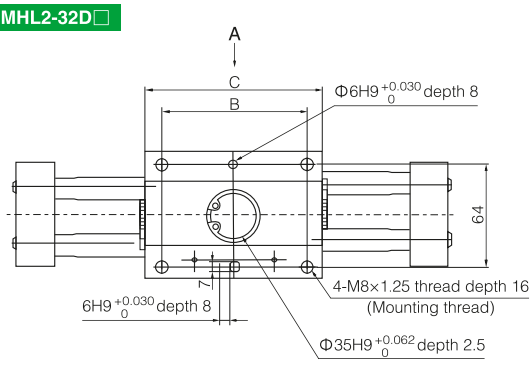

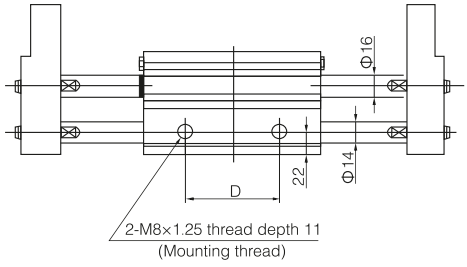

A direction view

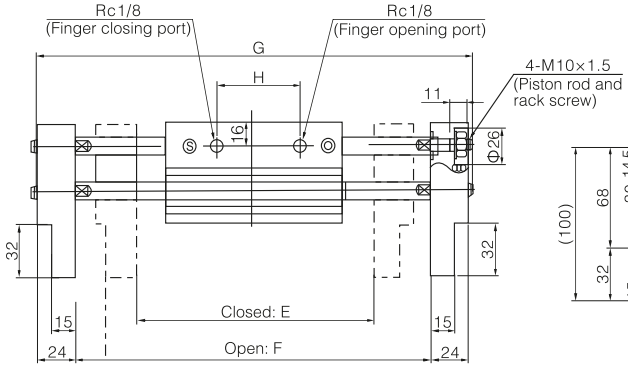

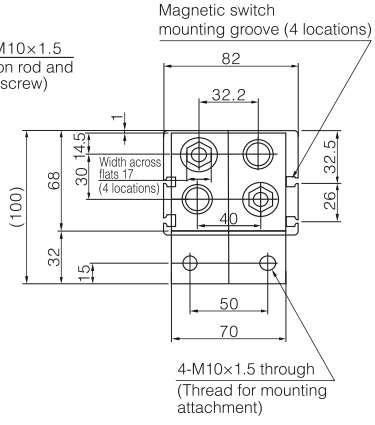

Model	B	C	D	E	F	G	H
NMHL2-32D	86	110	60	150	220	272	56
NMHL2-32D1	134	158	108	198	318	370	104
NMHL2-32D2	178	202	152	242	402	454	148

NMHL2-40D□

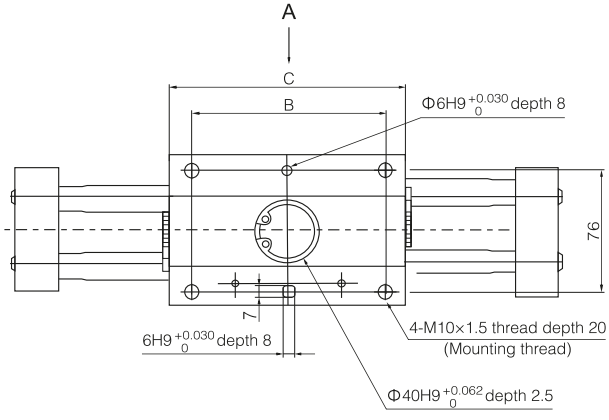

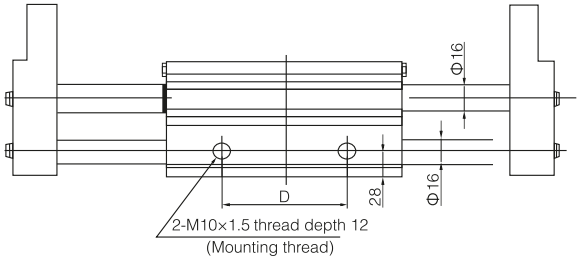

A direction view

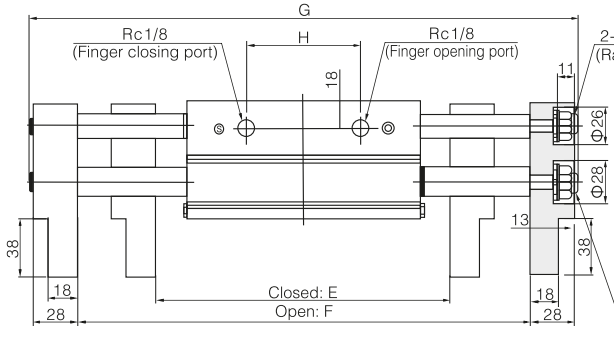

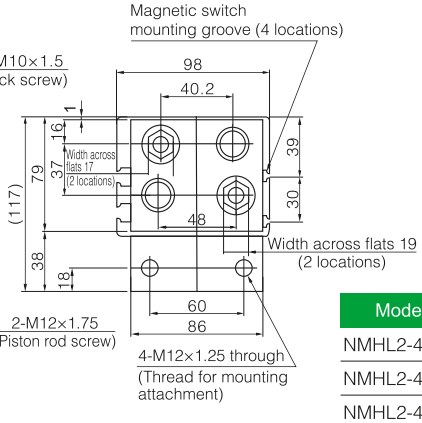

Model	B	C	D	E	F	G	H
NMHL2-40D	116	148	80	188	288	384	72
NMHL2-40D1	174	206	138	246	406	466	130
NMHL2-40D2	214	246	178	286	486	546	170

NMHY2 Series
180° Angular Type Pneumatic Gripper (Cam Type)

1. Built in magnetic ring type, magnetic switch can be installed.
2. 180° opening and closing type, simplifying pick-up and release action.
3. It can be used in special environment. The opening and closing parts of fingers are specially designed to prevent small objects from entering.
4. Easy to install, with locating hole.

Specifications

Bore size(mm)	NMHY2-10D	NMHY2-16D	NMHY2-20D	NMHY2-25D
Fluid	Air (to be filtered by 40μm filter element)			
Action mode	Double action			
Maximum operating pressure	0.6MPa			
Minimum operating pressure	0.1MPa			
Ambient and fluid temperature	-10~60℃			
Max.operating frequency(c.p.m)	60c.p.m			
Repeatability (mm)	±0.2mm			
Clamping torque(N·m) Note 1)	0.16	0.54	1.10	2.28
Lubrication Note 2)	Not required			
Port size	M5×0.8			

Note: 1. At a pressure of 0.5MPa.
2. If lubrication is required, please use turbine No.1 oil ISO VG32.

Symbol

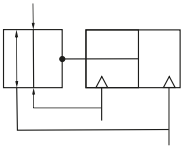

Ordering code

NMHY 2 – 16 D 2 – M9NL □

Number of fingers

2	2 fingers

Note: Opening and closing angle (both sides)
Open side: 180°
Closed side: -3°

Bore size

10	10mm
16	16mm
20	20mm
25	25mm

Acting type

D	Double acting

Finger option

Blank	Standard tapped mounting
2	Through-holes in opening/closing direction

Magnetic switch model

Blank	Without magnetic switch
M9N(V)	Refer to magnetic switch series for specifications and characteristics of magnetic switch
M9B(V)	
M9P(V)	

* Behind the magnetic switch model, Wire length representation mark: no mark: -0.5m, L-3m, Z-5m. Example: M9N, M9NL.

Number of magnetic switches

Blank	2 pcs.
S	1 pc.

Application example

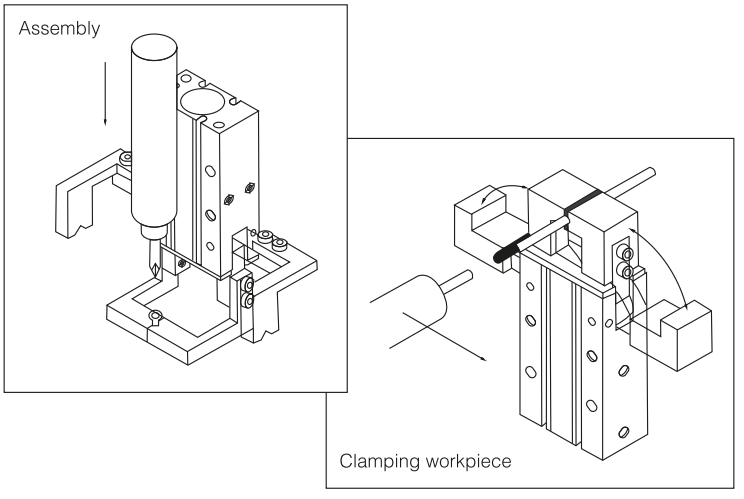

Structural drawing

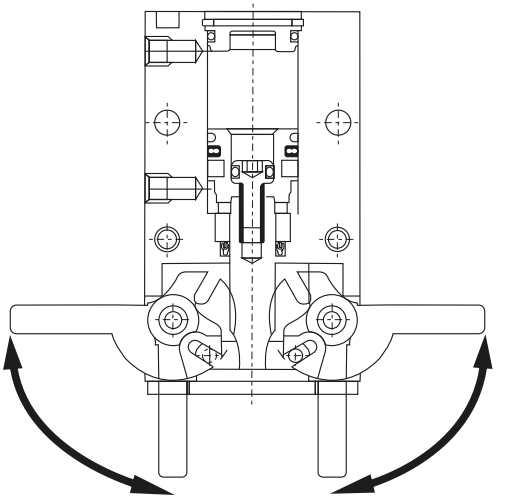

Dimensions

NMHY2-10D

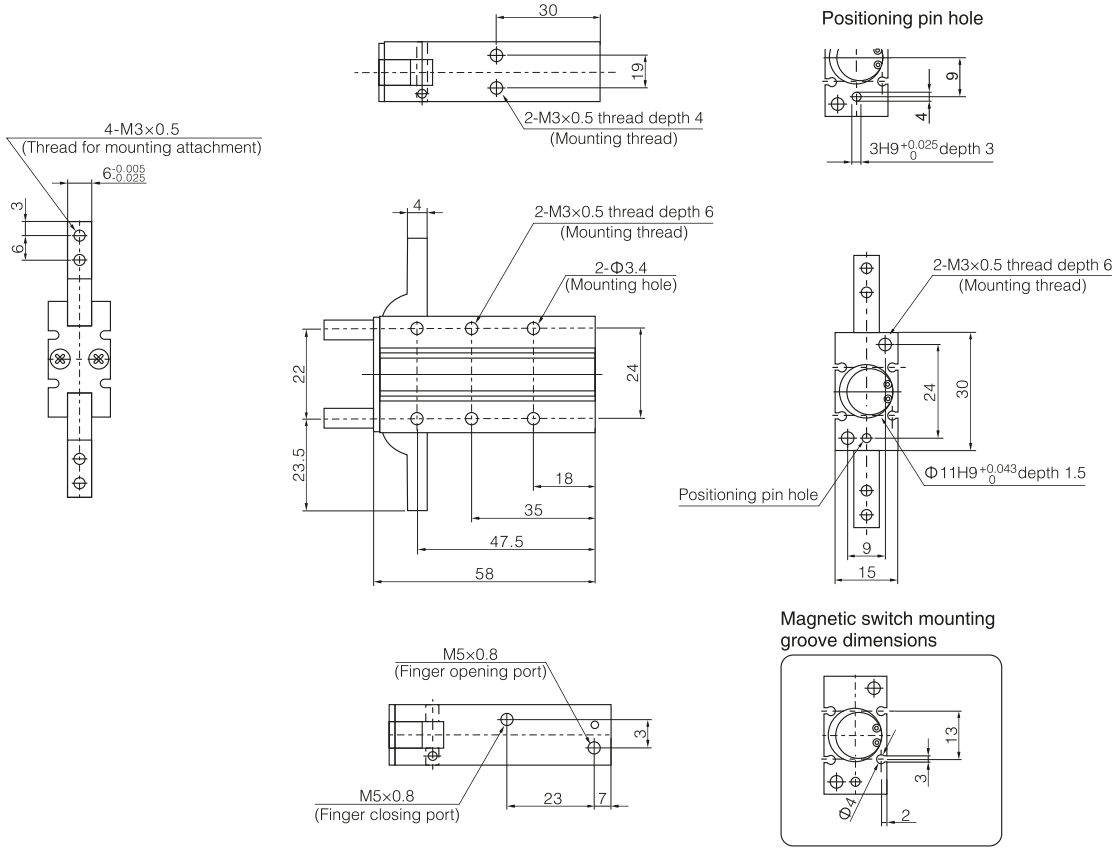

NMHY2-16D

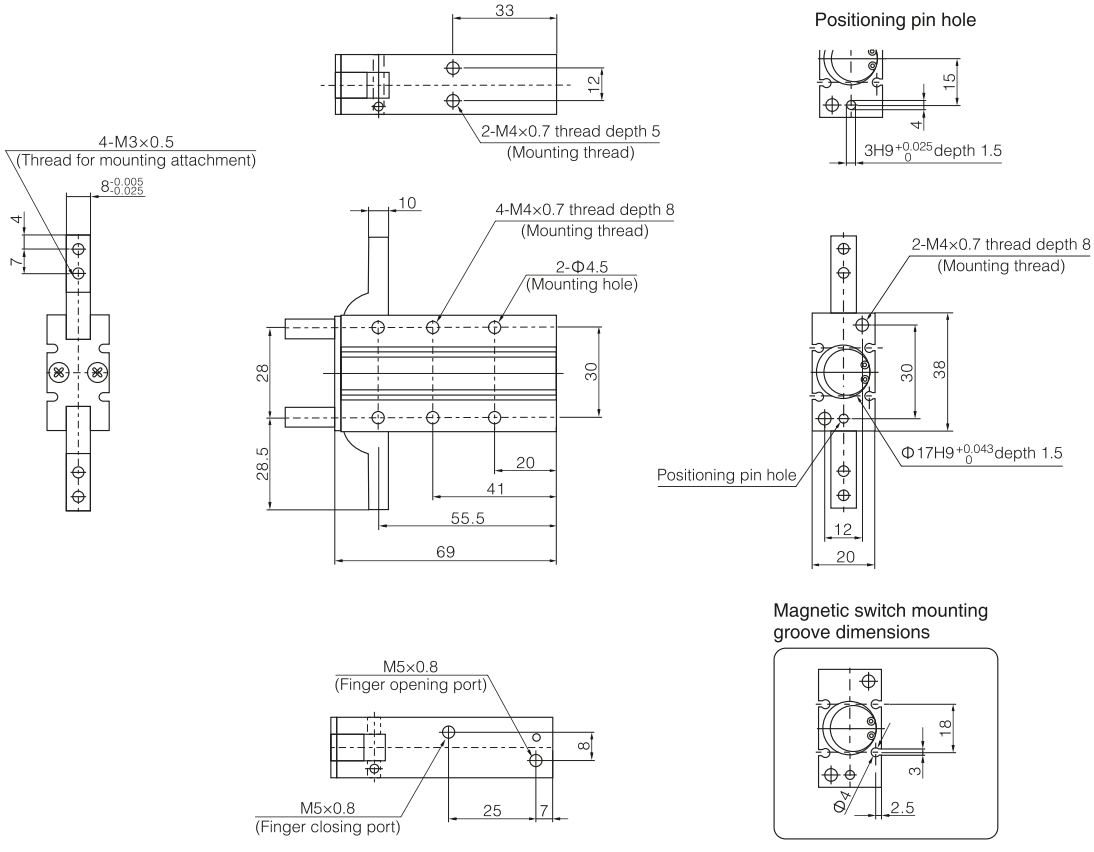

NMHY2-20D

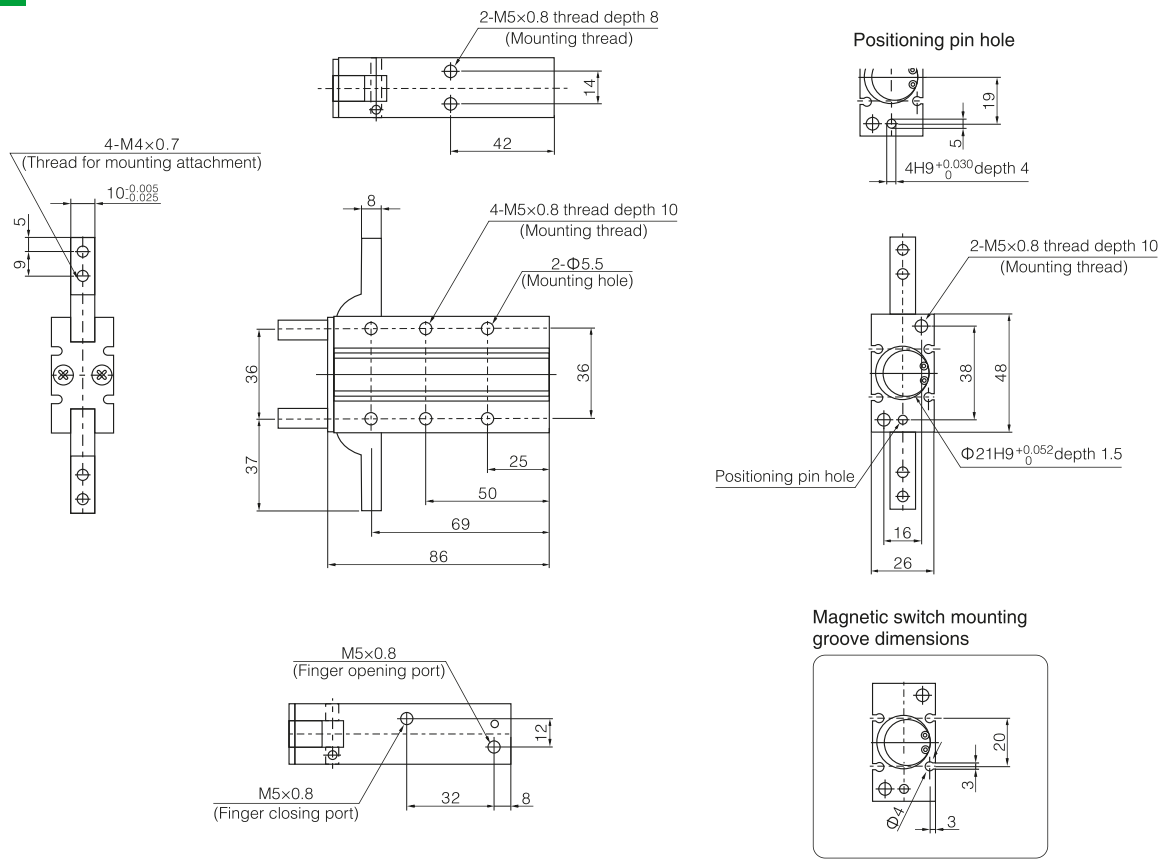

NMHY2-25D

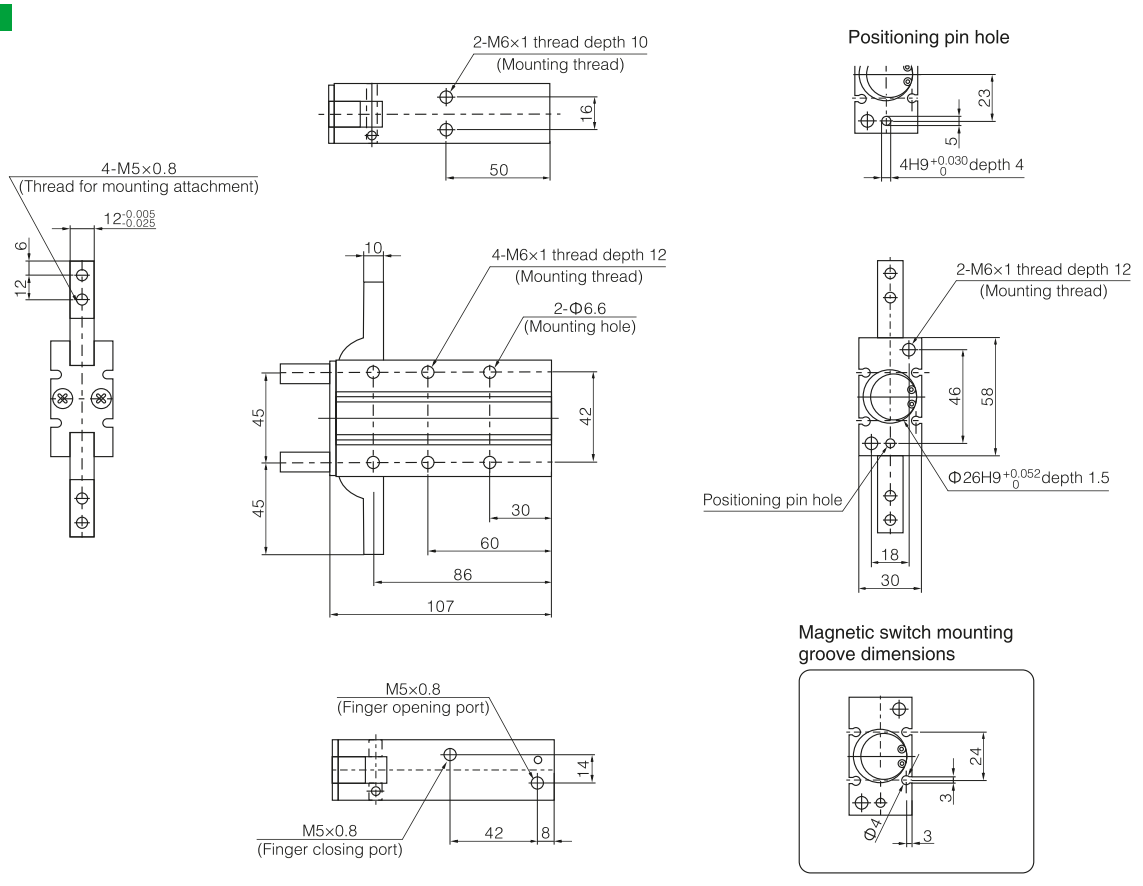

NMHT2 Series
Toggle Type Pneumatic Gripper

Specifications

Bore size(mm)	32	40	50	63
Action mode	Double acting			
Fluid	Air (to be filtered by 40μm filter element)			
Operating pressure (MPa)	0.1~0.6			
Ambient and fluid temperature (℃)	5~60			
Lubrication Note 1)	Not required			
Finger opening angle (Total)	-3°~28°	-3°~27°	-2°~23°	-2°~23°
Weight (kg)	0.80	1.09	1.93	2.08
Gripping moment (Effective value) (N·m) Note 2)	12.4	36.0	63.0	106

Note: 1. If lubrication is required, please use turbine No.1 oil ISO VG32.
2. In the case of 0.5MPa.

1. Suitable for clamping heavy work pieces.
2. Elbow structure, even if the pressure is suddenly lost, fingers can hold the workpiece.
3. Built in magnetic ring type, which can be installed for magnetic switch.

Symbol

Double acting/External grip

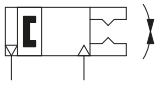

Ordering code

NMHT 2 – 32 D – M9N □

Number of fingers

2	2 fingers

Bore size

32	32mm
40	40mm
50	50mm
63	63mm

Acting type

D	Double acting

Magnetic switch model

Blank	Without magnetic switch (Built-in magnet)

* Refer to the right table for the model of magnetic switch.

Number of magnetic switches

Blank	2 pcs.
S	1 pc.
N	N pcs.

Magnetic switch model

M9N, M9P, M9B

* Behind the magnetic switch model, Wire length representation mark: no mark: -0.5m, L-3m, Z-5m.
* Mounting part model: BQ-2

Elbow structure

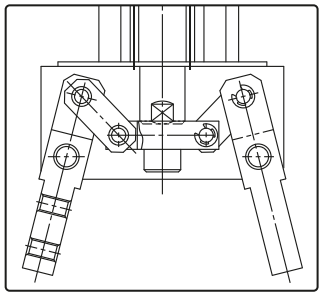

Open condition

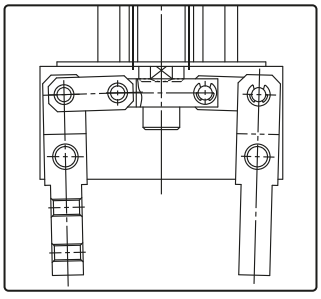

Closed condition

Use cases

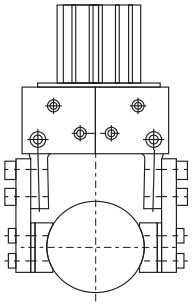

Installation type

Vertical mounting

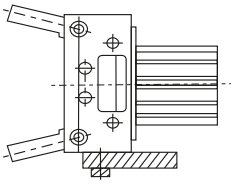

Axial mounting

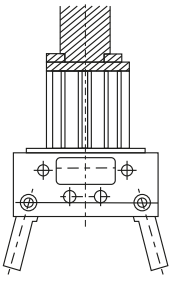

Lateral mounting

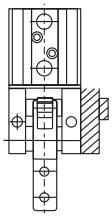

Dimensions

NMHT2-32D

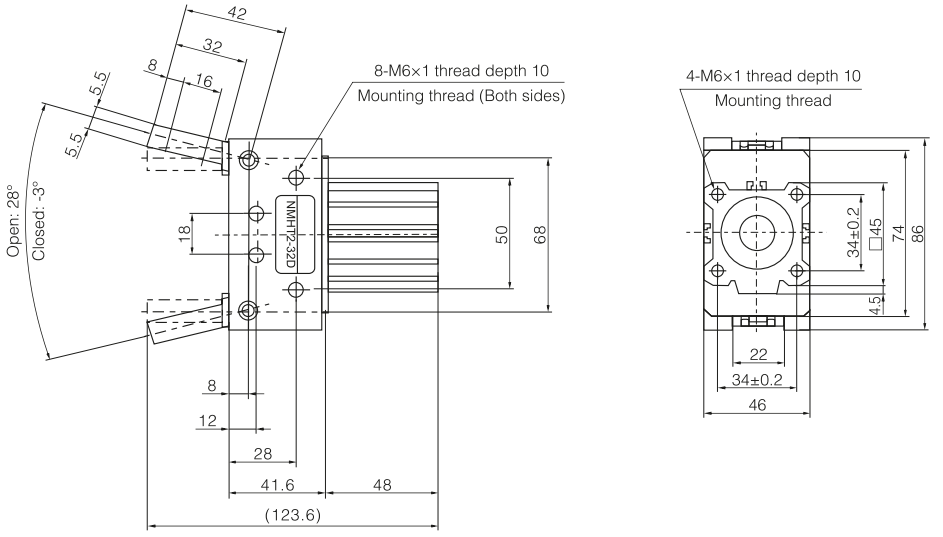

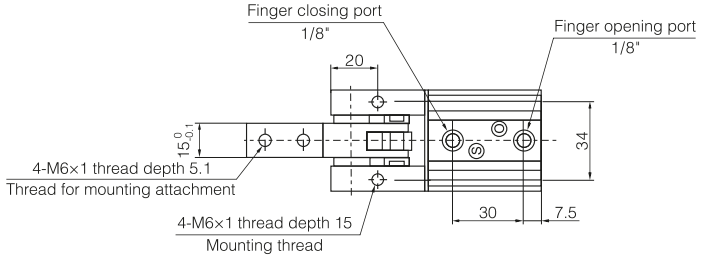

NMHT2-40D

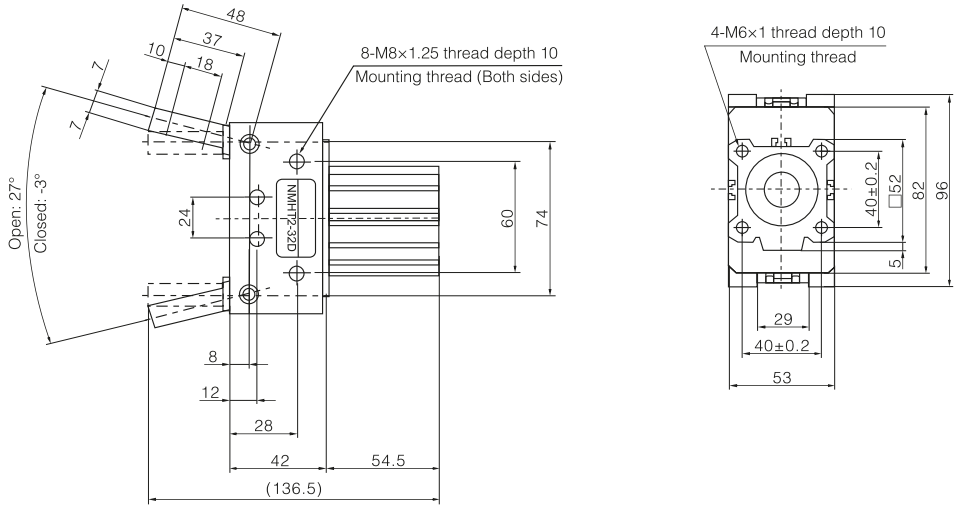

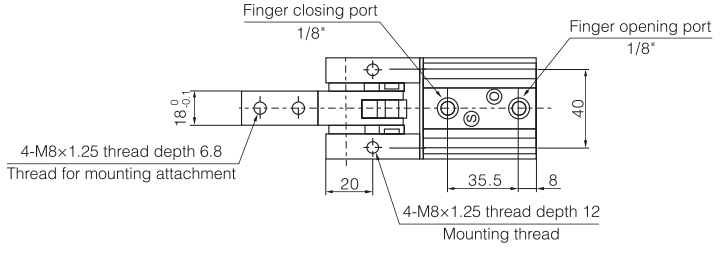

NMHT2-50D

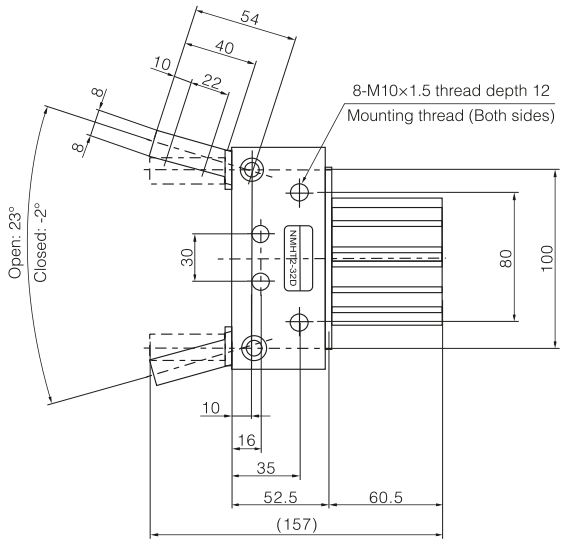

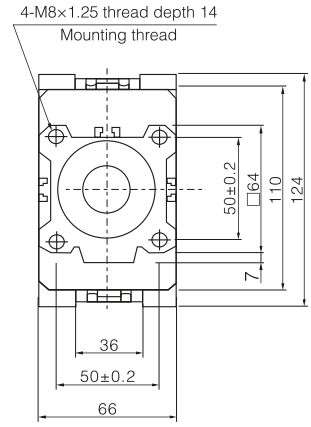

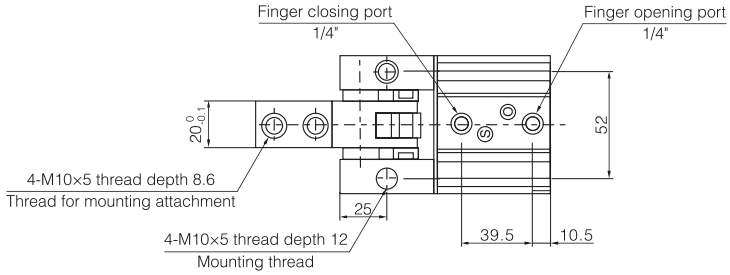

NMHT2-63D

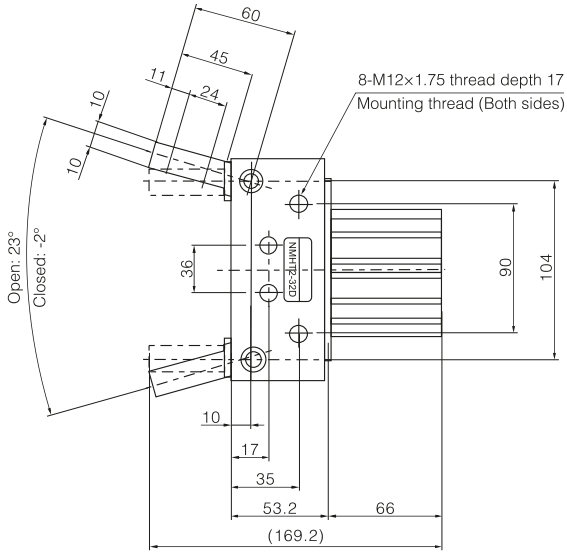

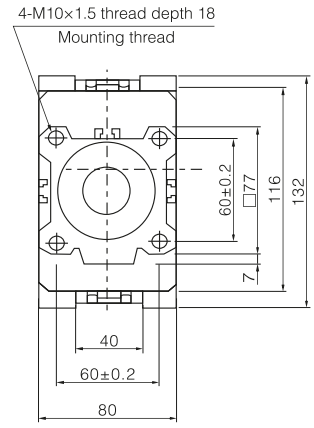

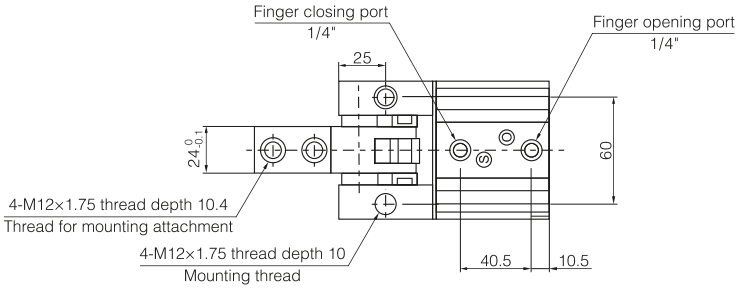

NMHW2 Series
180° Angular Type Pneumatic Gripper (Rack Pinion Type)

1. Built in magnetic ring type, magnetic switch can be installed.
2. 180° open and close type, simplifying pick-up and release action.
3. Unique bearing seal ring design, so that the piston rod does not need to be sealed:
- Shortened length
- Increased clamping force
- Prevent dust and cutting oil from entering
4. High precision and long service life, due to the following design:
- Rack and pinion drive mode
- Ball bearing on gear
- Wedge is installed between finger and gear
5. Easy to install.
6. Two types of finger mounting are available.

Specifications

Bore size(mm)	20	25	32	40	50
Fluid	Air (to be filtered by 40μm filter element)				
Action mode	Double action				
Maximum operating pressure	0.7MPa				
Minimum operating pressure	0.15MPa				
Ambient and fluid temperature	-10~60℃(with no condensation)				
Max.operating frequency(c.p.m)	60c.p.m		30c.p.m		
Repeatability (mm)	±0.2mm				
Clamping torque (N·m) Note 1)	0.30	0.73	1.61	3.70	8.27
Lubrication Note 2)	Not required				
Port size	M5×0.8		Rc1/8		Rc1/4

Note: 1. At a pressure of 0.5MPa.
2. If lubrication is required, please use turbine No.1 oil ISO VG32.

Symbol

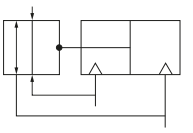

Ordering code

NMHW 2 – 20 D 1 Y59AL □

Number of fingers

2	2 fingers

Bore size

32	32mm
40	40mm
50	50mm
63	63mm

Acting type

D	Double acting

Finger option

Blank	Flat type fingers (Standard)
1	Right angle type fingers tapped mounting

Magnetic switch model

Blank	Without magnetic switch (Built-in magnet)

* Refer to the right table for the model of magnetic switch.

Number of magnetic switches

Blank	2 pcs.
S	1 pc.

Opening and closing angle/Model table of magnetic switch

Bore size (mm)	Opening and closing angle (Both sides)		*Model of magnetic switch (direct installation)
	Opening	Closing	
20	180°	-5°	M9B M9P M9N
25		-6°	
32		-5°	
40		-5°	
50		-4°	

* Refer to magnetic switch series for magnetic switch specifications and characteristics.
After the model of magnetic switch, the length indication mark of conductor is attached: no mark -0.5m, L-3m, Z-5m
Example: M9N, M9NL.

Finger option

Blank:
Flat type fingers
Standard)

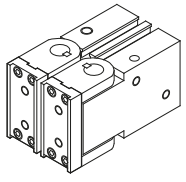

1: Right angle type fingers
tapped mounting
(optional)

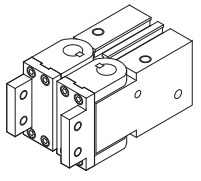

Functional example

Simplified pick and place action

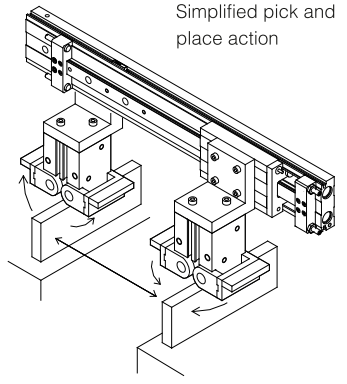

Drill hole

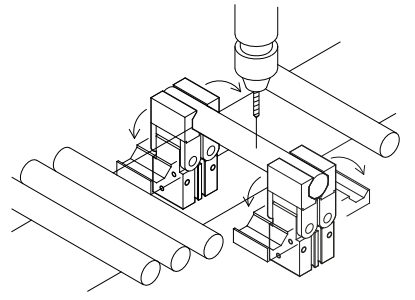

Dimensions

Flat finger type (Standard): NMHW2-□D

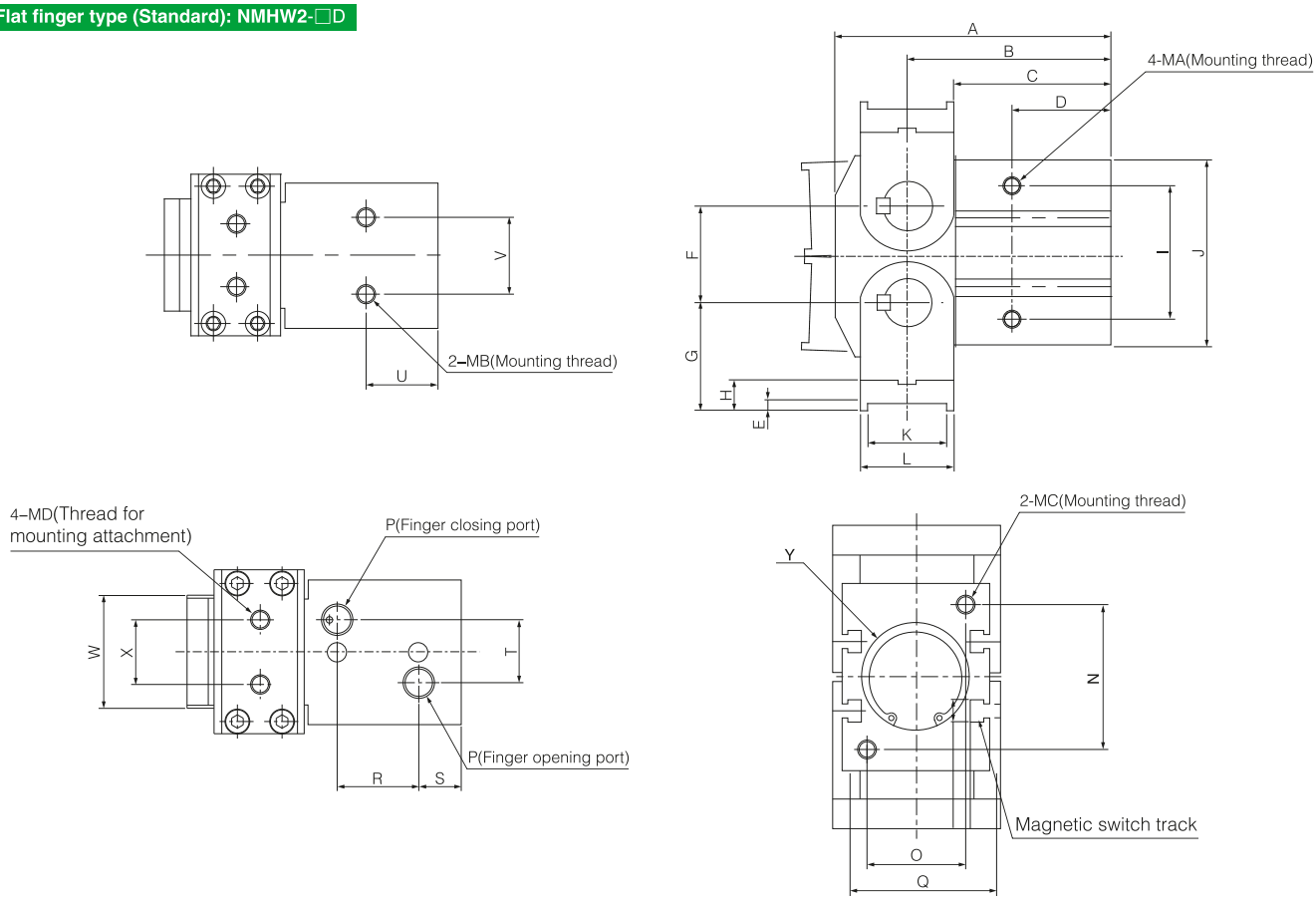

Bore size (mm)	A	B	C	D	E	F	G	H	I	J	K	L	MA	MB	MC	MD	P	N	O	Q	V	U	Y	X	W	R	S	T
20	60	45	35	23	2	18	23	7	27	36	12	16	M5×0.8			M4×0.7	M5×0.8	26	26	36	20	17	Φ21 depth 3	18	41	20	9	12
25	69	51	40	27	2	24	27	8	34	45	17	21	M6×1			M5×0.8	M5×0.8	30	30	40	24	20	Φ26 depth 3	20	45	23	10	16
32	83.5	61.5	47	29	2	30	32	9	42	58	23	27	M6×1			M6×1	1/8"	45	30	45	24	21	Φ34 depth 4	20	51	25	13	20
40	104.5	75.5	56.5	37.5	3	40	42	12	54	80	30	36	M8×1.25			M8×1.25	1/8"	60	36	56	30	27.5	Φ42 depth 4	28	67	33.5	14	20
50	136	96	69	48	4	56	58	17	70	112	44	52	M10×1.5			M10×1.5	1/4"	80	40	66	40	36	Φ52 depth 5	38	85	44	16	30

Opening and closing direction screw hole installation type finger: NMHW2-□D1

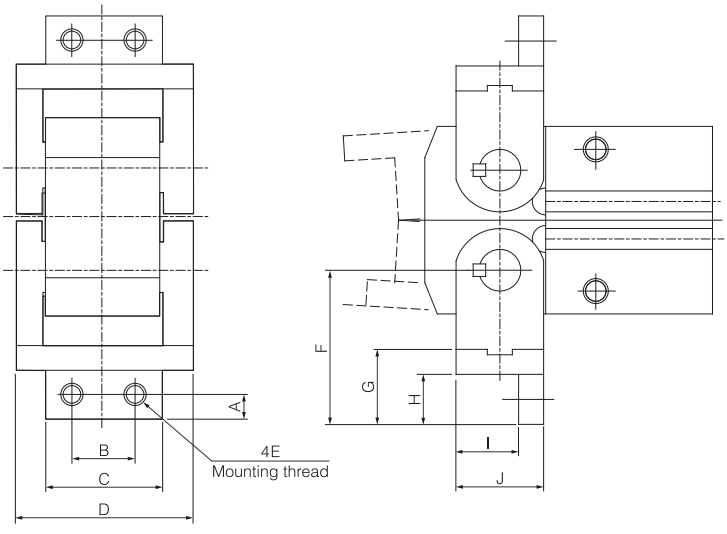

Bore size (mm)	A	B	C	D	E	F	G	H	I	J
20	5	14	28	41	M4×0.7	31	15	10	11	16
25	6	16	30	45	M5×0.8	37	18	12	15	21
32	7	18	34	51	M6×1	44	21	14	20	27
40	10	24	44	67	M8×1.25	60	30	21	26	36
50	12	30	58	85	M10×1.5	78	37	24	39	52

1. Compared with NMHZ2 series, the height is reduced by about 1/3, which not only save space, but also reduces the action time, and also reduces the down bending, so the accuracy is improved.
2. There are three types of opening and closing process for each cylinder bore size: long, medium and short.

Specifications

Bore size(mm)	8	12	16	20
Fluid	Air (to be filtered by 40μm filter element)			
Operating pressure	0.15~0.7	0.1~0.7		
Ambient and fluid temperature	-10℃~+60℃(with no condensation)			
Repeatability(mm)	±0.05 Note 1			
Max.operating frequency(c.p.m)	Short stroke\Medium stroke:120; Long stroke: 60			
Action mode	Double acting			
Effective clamping force of each finger (N) Note 2	19	48	90	141
Opening and closing stroke (both sides) (mm)	8,16,32	12,24,48	16,32,64	20,40,80

Note: 1. When there is no bias load. If there is partial load on fingers, the maximum value is ± 0.15m due to the influence of backlash.
2. When the pressure is 0.5MPa and the distance between clamping points is 20mm.

Ordering code

NMHF 2 – 12 D □ □ – M9NL □

Number of fingers

2	2 fingers

Bore size

8	8mm
12	12mm
16	16mm
20	20mm

Acting type

D	Double acting

Stroke

Blank	Short stroke
1	Medium stroke
2	Long stroke

Body option

Blank	Axial piping type
2	Side piping type

Magnetic switch model

Blank	Without magnetic switch (Built-in magnet)

* Refer to the right table for the model of magnetic switch.

Number of magnetic switches

Blank	2 pcs.
S	1 pc.

Symbol

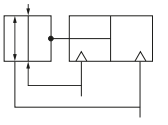

Magnetic switch model

M9N(V),M9B(V),M9P(V),F9NW(V)

* Behind the magnetic switch model, Wire length representation mark: no mark: -0.5m, L-3m, Z-5m. Example: M9NL

Dimensions

NMHF2-8D • 8D1 • 12D

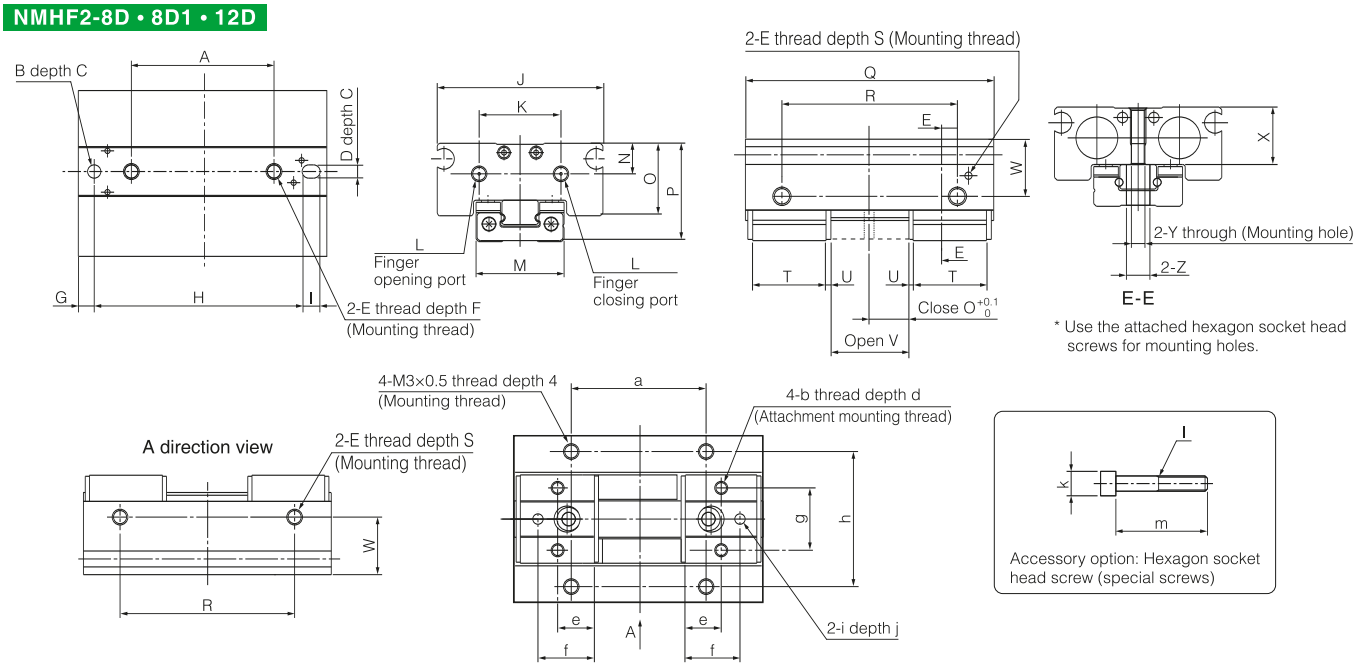

Model	A	B	C	D	E	F	G	H	I	J	K	L	M	N	O	P	Q	R	S	T
NMHF2-8D	16	$\Phi 25H9^{+0.025}_{0}$	2.5	$\Phi 25H9^{+0.025}_{0}$	M3×0.5	7	3	28.3	3.4	32	15.8	M3×0.5	$17^{0}_{-0.01}$	5.9	14	19	36	22	4	12
NMHF2-8D1	28	$\Phi 25H9^{+0.025}_{0}$	2.5	$\Phi 25H9^{+0.025}_{0}$	M3×0.5	7	3	40.3	3.4	32	15.8	M3×0.5	$17^{0}_{-0.01}$	5.9	14	19	48	34	4	14
NMHF2-12D	26	$\Phi 3H9^{+0.030}_{0}$	3	$\Phi 3H9^{+0.025}_{0}$	M4×0.7	10	4	42	4	40	20	M5×0.8	$20^{0}_{-0.01}$	7.7	19	25	52	38	5	18

Model	U	V	W	X	Y	Z	a	b	d	e	f	g	h	i	j	k	l	m
NMHF2-8D	0.8	8±1	11	11	Φ2.6	Φ4.5	14	M2.5×0.45	3	6	10	12	26	$\Phi 2H9^{+0.025}_{0}$	2	Φ4	M2.5×0.45	15
NMHF2-8D1	0.8	16±1	11	11	Φ2.6	Φ4.5	26	M2.5×0.45	3	7	11	12	26	$\Phi 2H9^{+0.025}_{0}$	2	Φ4	M2.5×0.45	15
NMHF2-12D	1	12±1	15	14.8	Φ3.4	Φ5.5	28	M3×0.5	4	9	14	15	33	$\Phi 2.5H9^{+0.025}_{0}$	2.5	Φ5	M3×0.5	20

NMHF2-12D1 • 16D • 16D1 • 20D • 20D1

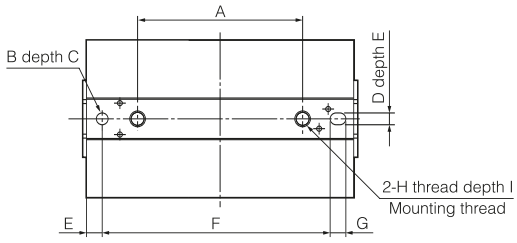

A direction view

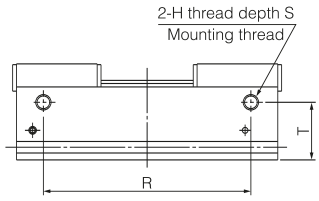

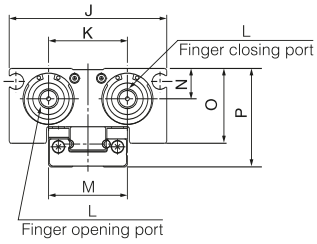

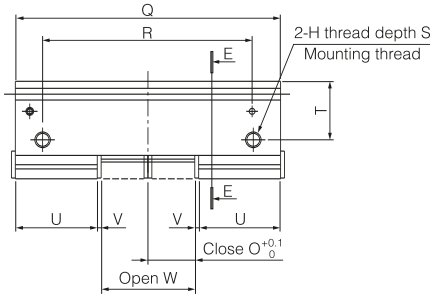

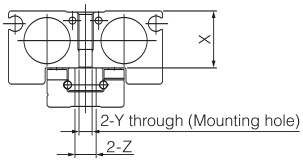

E-E

* Use the attached hexagon socket head screws for mounting holes.

Auto switch mounting groove dimensions

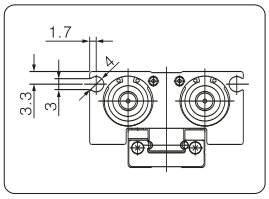

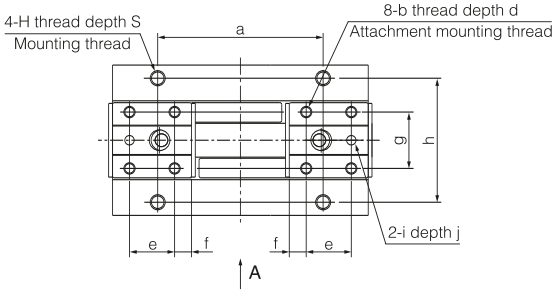

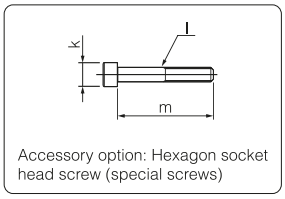

Accessory option: Hexagon socket head screw (special screws)

Model	A	B	C	D	E	F	G	H	I	J	K	L	M	N	O	P	Q	R	S	T
NMHF2-12D1	42	$\Phi 3H9^{+0.030}_{0}$	3	$\Phi 3H9^{+0.025}_{0}$	4	58	4	M4×0.7	10	40	20	M5×0.8	$20^{0}_{-0.1}$	7.7	19	25	68	54	5	15
NMHF2-16D	38	$\Phi 4H9^{+0.030}_{0}$	3	$\Phi 4H9^{+0.030}_{0}$	6	57.5	5	M5×0.8	12	50	26	M5×0.8	$27^{0}_{-0.1}$	10.6	24	33	72	52	5.5	20
NMHF2-16D1	60	$\Phi 4H9^{+0.030}_{0}$	3	$\Phi 4H9^{+0.030}_{0}$	6	79.5	5	M5×0.8	12	50	26	M5×0.8	$27^{0}_{-0.1}$	10.6	24	33	94	74	5.5	20
NMHF2-20D	38	$\Phi 5H9^{+0.030}_{0}$	4	$\Phi 5H9^{+0.030}_{0}$	6	71	6	M6×1	15	62	33	M5×0.8	$32^{0}_{-0.1}$	13	30	41	86	56	6	25
NMHF2-20D1	66	$\Phi 5H9^{+0.030}_{0}$	4	$\Phi 5H9^{+0.030}_{0}$	6	99	6	M6×1	15	62	33	M5×0.8	$32^{0}_{-0.1}$	13	30	41	114	84	6	25

Model	U	V	W	X	Y	Z	a	b	d	e	f	g	h	i	j	k	l	m
NMHF2-12D1	21	1	24±1	14.8	Φ3.4	Φ5.5	44	M3×0.5	4	12	4.5	15	33	$\Phi 2.5H9^{+0.025}_{0}$	2.5	Φ5	M3×0.5	20
NMHF2-16D	25	1.2	16±1	20	Φ4.3	Φ7.5	36	M4×0.7	4	15	5	20	43	$\Phi 3H9^{+0.025}_{0}$	3	Φ5	M3×0.5	20
NMHF2-16D1	29	1.2	32±1	20	Φ4.3	Φ7.5	58	M4×0.7	4	18	5.5	20	43	$\Phi 3H9^{+0.025}_{0}$	3	Φ5	M3×0.5	20
NMHF2-20D	31	1.2	20±1	25	Φ5.2	Φ10	40	M4×0.7	4	16	7.5	24	52	$\Phi 3H9^{+0.025}_{0}$	3	Φ5	M3×0.5	20
NMHF2-20D1	36	1.2	40±1	25	Φ5.2	Φ10	68	M4×0.7	4	20	8	24	52	$\Phi 3H9^{+0.025}_{0}$	3	Φ5	M3×0.5	20

NMHF2-8D2 • 12D2 • 16D2 • 20D2

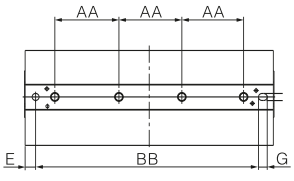

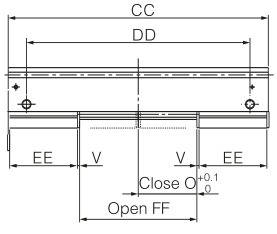

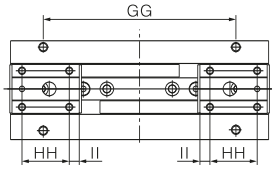

* Dimensions not indicated are the same as D1 series of the same bore.

Model	AA	BB	CC	DD	EE	FF	GG	HH	II
NMHF2-8D2	17	64.3	72	58	18	32±1	50	8	5
NMHF2-12D2	26	94	104	90	27	48±1	80	18	4.5
NMHF2-16D2	36	127.5	142	122	37	64±1	106	26	5.5
NMHF2-20D2	42	159	174	144	46	80±1	128	30	8

NMHS2 Series
Parallel Type Pneumatic Gripper/2-Finger Type

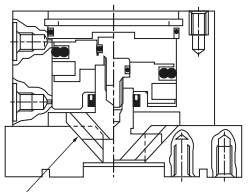

Wedge cam structure can increase clamping force

Specifications

Model		NMHS2-16D	NMHS2-20D	NMHS2-25D	NMHS2-32D	NMHS2-40D	NMHS2-50D	NMHS2-63D
Bore size (mm)		16	20	25	32	40	50	63
Fluid		Air (to be filtered by 40μm filter element)						
Operating pressure		0.2~0.6MPa			0.1~0.6MPa			
Ambient and fluid temperature		-10~+60℃						
Repeatability (mm)		±0.01 mm						
Max.operating frequency(c.p.m)		120 c.p.m			60 c.p.m			
Lubrication		Not required						
Action		Double action						
Effective gripping force (N) at 0.5 MPa Note)	External grip	21	37	63	111	117	280	502
	Internal grip	23	42	71	123	195	306	537
Finger stroke(mm)		4	4	6	8	8	12	16
Pipe size		M3×0.5	M5×0.8					
Magnetic switch		Built in magnetic ring type						
Magnetic switch model		M9P(V) M9N(V) • M9B(V)						

Note: Values for Φ16 to Φ25 are with gripping point L=20mm,
and for Φ32 to Φ63 with gripping point L=30mm.
Behind the magnetic switch model is, Wire length representation mark: no mark: -0.5m, L-3m, Z-5m.
Example: NMHS2-16D-M9NL

Symbol

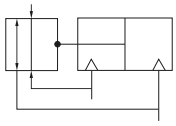

Ordering code

NMHS 2 – 12 D – M9N □

Number of fingers

2	2 fingers

Bore size

16	16mm
20	20mm
25	25mm
32	32mm
40	40mm
50	50mm
63	63mm

Acting type

D	Double acting

Magnetic switch model

Blank	Without magnetic switch

Number of magnetic switches

Blank	2 pcs.
S	1 pc.

Dimensions

NMHS2-16D~25D

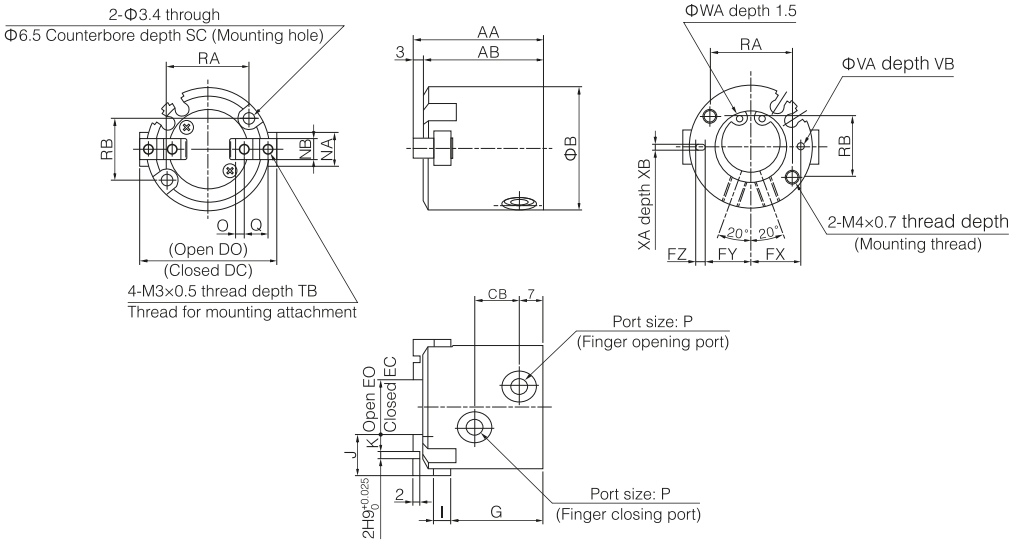

Model	AA	AB	B	CB	DC	DO	EC	EO	FX	FY	FZ	G	I	J	K	NA	NB	O	P	Q
NMHS2-16D	35	32	30	11	30	34	10	14	12.5	11	3	25	4	10	4	8	$5h9_{-0.030}^{0}$	2	M3×0.5	6
NMHS2-20D	38	35	36	13	36	40	12	16	14.5	13	3	27	5	12	5	10	$6h9_{-0.030}^{0}$	2.5	M5×0.8	7
NMHS2-25D	40	37	42	15	42	48	14	20	17	14.5	5	28	5	14	6	12	$6h9_{-0.030}^{0}$	3	M5×0.8	8

Model	RA	RB	SC	TB	VA	NB	WA	XA	XB
NMHS2-16D	18	16	8	5	$2H9^{+0.025}_{0}$	2	$17H9^{+0.043}_{0}$	$2H9^{+0.025}_{0}$	2
NMHS2-20D	24	18	9.5	6	$2H9^{+0.025}_{0}$	2	$21H9^{+0.052}_{0}$	$2H9^{+0.025}_{0}$	2
NMHS2-25D	26	22	10	6	$3H9^{+0.025}_{0}$	3	$26H9^{+0.052}_{0}$	$3H9^{+0.025}_{0}$	3

NMHS2-32D • 40D

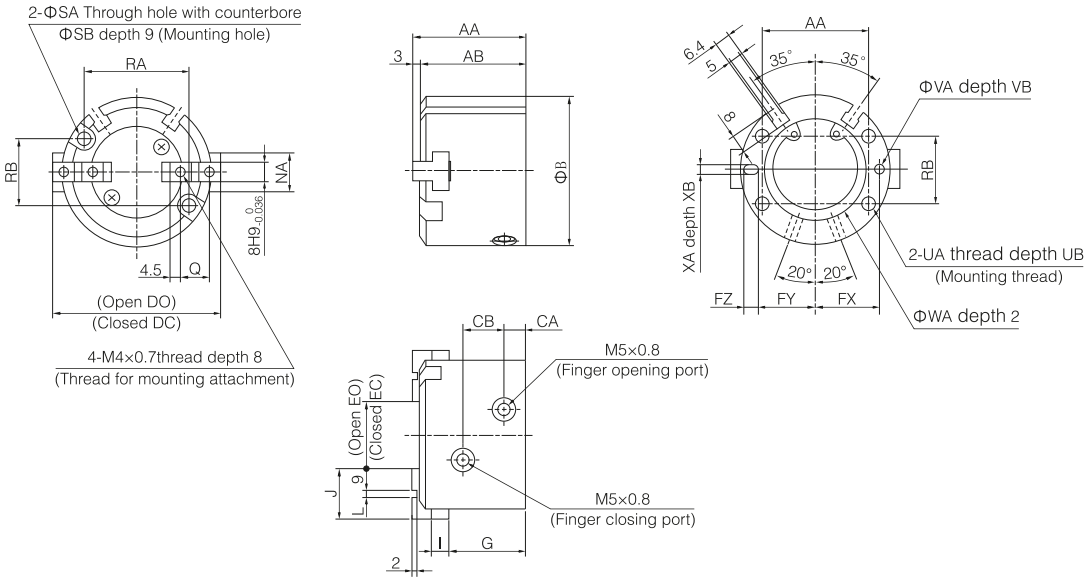

Model	AA	B	AB	CA	CB	DC	DO	EC	EO	FX	FY	FZ	G	I	J	L	NA	Q	RA	RB	SA
NMHS2-32D	44	56	41	8	16	56	64	16	24	23	20.5	5	30.5	6	20	$2H9^{+0.025}_{0}$	14	11	38	25	4.5
NMHS2-40D	47	62	44	9	17	62	70	20	28	26.5	23.5	6	32	7	21	$3H9^{+0.025}_{0}$	16	12	44	28	5.5

Model	SB	UA	UB	VA	VB	WA	XA	XB
NMHS2-32D	8	M5×0.8	10	$3H9^{+0.025}_{0}$	3	$34H9^{+0.062}_{0}$	$3H9^{+0.025}_{0}$	3
NMHS2-40D	9.5	M6×1	10	$4H9^{+0.030}_{0}$	4	$42H9^{+0.062}_{0}$	$4H9^{+0.030}_{0}$	4

NMHS2-50D • 63D

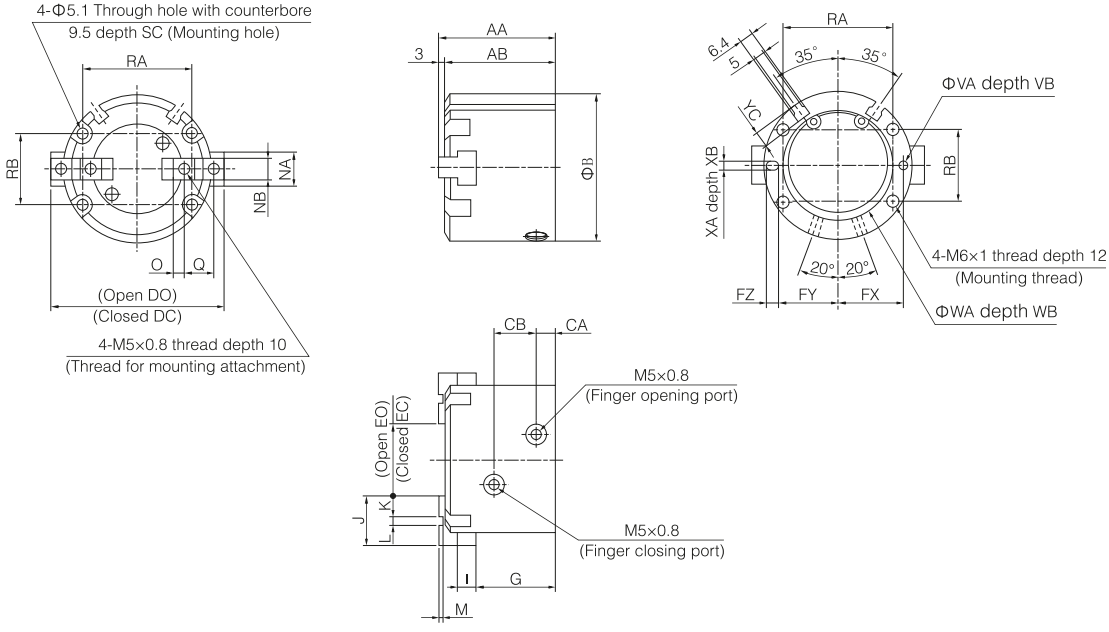

Model	AA	AB	AC	B	CA	CB	DC	DO	EC	EO	FX	FY	FZ	G	I	J	K	L	M	NA	NB
NMHS2-50D	55	52	3	70	9	20	70	82	22	34	31	28	6	37.5	9	24	10	$4H9^{+0.030}_{0}$	2	18	$10H9^{0}_{-0.036}$
NMHS2-63D	66	62	4	86	12	22	86	102	30	46	38	34.5	7	44	11	28	11	$6H9^{+0.030}_{0}$	3	24	$12H9^{0}_{-0.043}$

Model	O	Q	RA	RB	SC	VA	VB	WA	WB	XA	XB	YC
NMHS2-32D	5	14	52	34	12	$4H9^{+0.030}_{0}$	4	$52H9^{+0.074}_{0}$	2	$4H9^{+0.030}_{0}$	4	7
NMHS2-40D	5.5	17	66	38	14	$5H9^{+0.030}_{0}$	5	$65H9^{+0.074}_{0}$	2.5	$5H9^{+0.030}_{0}$	5	7.5

NMHS3 Series
Parallel Type Pneumatic Gripper/3-Finger Type

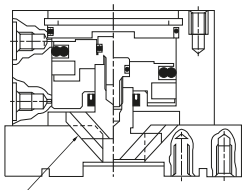

Wedge cam structure can increase clamping force

Specifications

Model		NMHS□3-16	NMHS□3-20	NMHS□3-25	NMHS□3-32	NMHS□3-40	NMHS□3-50	NMHS□3-63	NMHS□3-80	NMHS□3-100	NMHS□3-125
Bore size(mm)		16	20	25	32	40	50	63	80	100	125
Fluid		Air (to be filtered by 40μm filter element)									
Operating pressure		0.2~0.6MPa			0.1~0.6MPa						
Ambient and fluid temperature		-10~+60℃									
Repeatability (mm)		±0.01									
Max.operating frequency(c.p.m)		120 c.p.m			60 c.p.m				30 c.p.m		
Lubrication		Not required									
Action		Double action									
Effective gripping force (N)at 0.3MPa Note)	External grip	14	14	42	74	118	187	335	500	750	1270
	Internal grip	16	28	47	82	130	204	359	525	780	1320
	With dust cover	9	21	36	62	97	155	280	400	-	-
With cover: standard finger stroke (mm)		4	4	6	8	8	12	16	20	24	32
Long stroke finger stroke (mm)		10	10	12	16	20	28	32	40	48	64
Pipe size		M3×0.5	M5×0.8						1/8"	1/4"	3/8"
Magnetic switch model		Built in magnetic ring type									

Note: Values for Φ16 to Φ25 are with gripping point L=20mm, for Φ32 to Φ63 with gripping point L=30mm, and for Φ80 to Φ125 with gripping point L=50mm.

Symbol

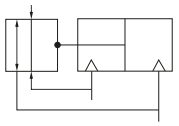

Magnetic switch model list

Bore size(mm)	16, 20, 25	32, 40, 50, 63, 80	100, 125
NMHS3 NMHSL3	M9N, M9P M9B, F9BA	$Y59^{A}_{B}$, $Y69^{A}_{B}$ Y7NW, Y7BA	
NMHSJ3	M9N, M9P, M9B, F9NW F9BA		-

Ordering code

With dust cover type **NMHS J 3 – 32 D □ – M9N □**

Standard type/long stroke type **NMHS L 3 – 32 D – M9N □**

Varieties

Blank	Standard type
L	Long stroke type
J	With dust cover type

Number of fingers

3	3 fingers

Bore size

16	16mm
20	20mm
25	25mm
32	32mm
40	40mm
50	50mm
63	63mm
80	80mm
100	100mm
125	125mm

Acting type

D	Double acting

Dust cover type

Blank	Chloroprene rubber (CR)
F	Fluororubber (FKM)
S	Silicone rubber (Si)

Magnetic switch model

Blank	Without magnetic switch(Built-in magnet)

* Behind the magnetic switch model, Wire length representation mark: no mark: -0.5m, L-3m, Z-5m. Example: Y59BL

Number of magnetic switches

Blank	2 pcs.
S	1 pc.
*n	n pcs.

* Suitable bore size Φ32~Φ125.

Dimensions

NMHS3-16D~25D

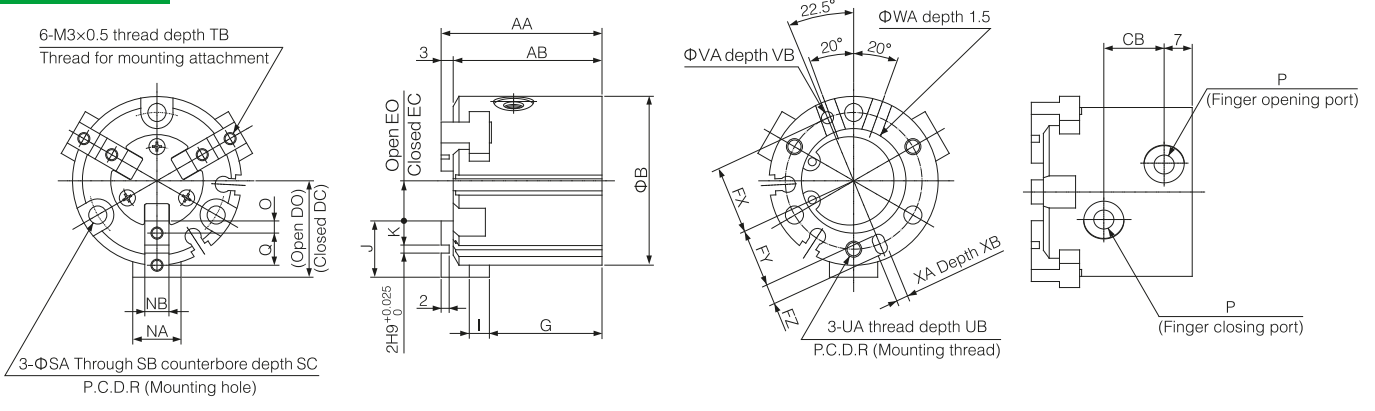

Model	AA	AB	B	CB	DC	DO	EC	EO	FX	FY	FZ	G	I	J	K	NA	NB	O	P	Q	R
NMHS3-16D	35	32	30	11	15	17	5	7	12.5	11	3	25	4	10	4	8	$5h9_{-0.030}^{0}$	2	M3×0.5	6	25
NMHS3-20D	38	35	36	13	18	20	6	8	14.5	13	3	27	5	12	5	10	$6h9_{-0.030}^{0}$	2.5	M5×0.8	7	29
NMHS3-25D	40	37	42	15	21	24	7	10	17	14.5	5	28	5	14	6	12	$6h9_{-0.030}^{0}$	3	M5×0.8	8	34

Model	SA	SB	SC	TB	UA	UB	VA	VB	WA	XA	XB
NMHS3-16D	3.4	6.5	8	5	M3×0.5	4.5	$2H9^{+0.025}_{0}$	2	$17H9^{+0.043}_{0}$	$2H9^{+0.025}_{0}$	2
NMHS3-20D	3.4	6.5	9.5	6	M3×0.5	6	$2H9^{+0.025}_{0}$	2	$21H9^{+0.052}_{0}$	$2H9^{+0.025}_{0}$	2
NMHS3-25D	4.5	8	10	6	M4×0.7	6	$3H9^{+0.025}_{0}$	3	$26H9^{+0.052}_{0}$	$3H9^{+0.025}_{0}$	3

NMHS3-32D~80D

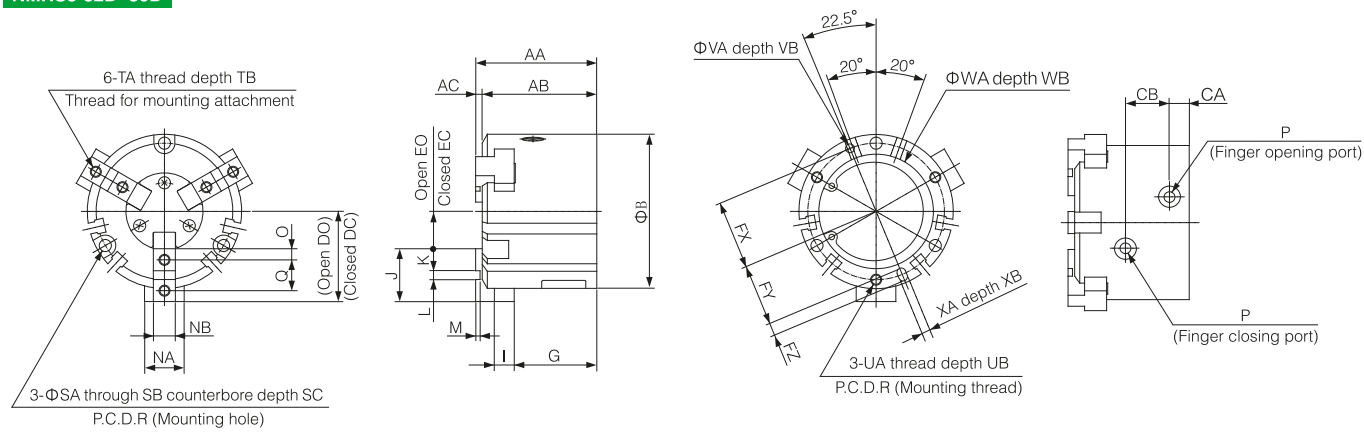

Model	AA	AB	AC	B	CA	CB	DC	DO	EC	EO	FX	FY	FZ	G	I	J	K	L	M	NA	NB
NMHS3-32D	44	41	3	52	8	16	28	32	8	12	22	19.5	5	30.5	6	20	9	$2H9^{+0.025}_{0}$	2	14	$8h9^{0}_{-0.036}$
NMHS3-40D	47	44	3	62	9	17	31	35	10	14	26.5	23.5	6	32	7	21	9	$3H9^{+0.025}_{0}$	2	16	$8h9^{0}_{-0.036}$
NMHS3-50D	55	52	3	70	9	20	35	41	11	17	31	28	6	37.5	9	24	10	$4H9^{+0.030}_{0}$	2	18	$10h9^{0}_{-0.036}$
NMHS3-63D	66	62	4	86	12	22	43	51	15	23	38	34.5	7	44	11	28	11	$6H9^{+0.030}_{0}$	3	24	$12h9^{0}_{-0.043}$
NMHS3-80D	82	77	5	106	13.5	27	53.5	63.5	21.5	31.5	47.5	43.5	8	56	12	32	12	$8H9^{+0.036}_{0}$	4	28	$14h9^{0}_{-0.043}$

Model	O	P	Q	R	SA	SB	SC	TA	TB	UA	UB	VA	VB	WA	WB	XA	XB	YC
NMHS3-32D	4.5	M5×0.8	11	44	4.5	8	9	M4×0.7	8	M4×0.7	6	$3H9^{+0.025}_{0}$	3	$34H9^{+0.062}_{0}$	2	$3H9^{+0.025}_{0}$	3	6
NMHS3-40D	4.5	M5×0.8	12	53	5.5	9.5	9	M4×0.7	8	M5×0.8	7.5	$4H9^{+0.030}_{0}$	4	$42H9^{+0.062}_{0}$	2	$4H9^{+0.030}_{0}$	4	8
NMHS3-50D	5	M5×0.8	14	62	5.5	9.5	12	M5×0.8	10	M5×0.8	10	$4H9^{+0.030}_{0}$	4	$52H9^{+0.074}_{0}$	2	$4H9^{+0.030}_{0}$	4	7
NMHS3-63D	5.5	M5×0.8	17	76	6.6	11	14	M5×0.8	10	M6×1	9	$5H9^{+0.030}_{0}$	5	$65H9^{+0.074}_{0}$	2.5	$5H9^{+0.030}_{0}$	5	7.5
NMHS3-80D	6	Rc1/8	20	95	6.6	11	19	M6×1	12	M6×1	12	$6H9^{+0.030}_{0}$	6	$82H9^{+0.087}_{0}$	3	$6H9^{+0.030}_{0}$	6	9

NMHS3-100D・125D

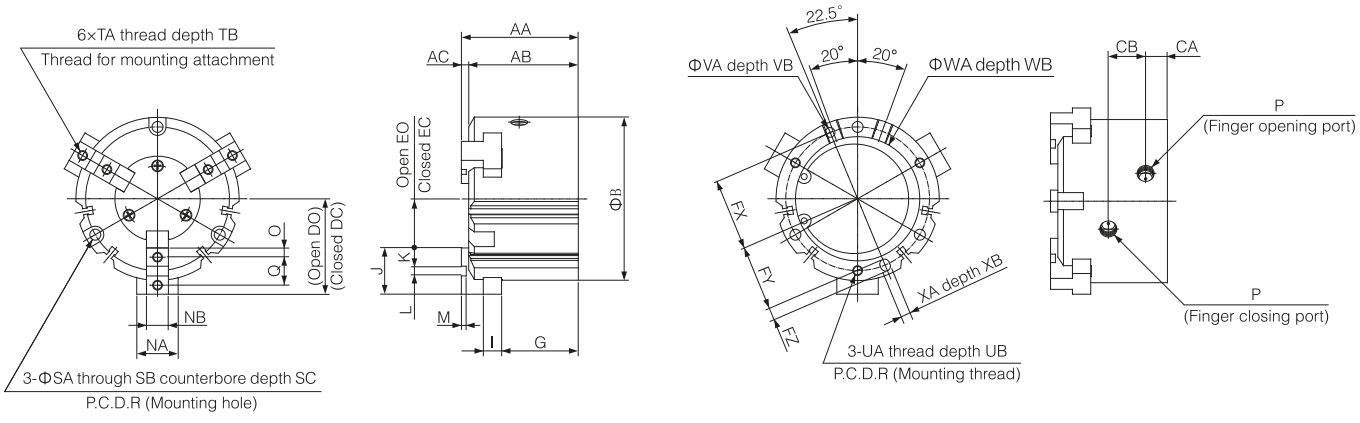

Model	AA	AB	AC	B	CA	CB	DC	DO	EC	EO	FX	FY	FZ	G	I	J	K	L	M	NA	NB
NMHS3-100D	96	90	6	134	18	30.6	66	78	28	40	59	54	10	63	15	38	15	$8H9^{+0.036}_{0}$	4	34	$18h9^{0}_{-0.043}$
NMHS3-125D	122	114	8	166	23.5	38	82	98	30	46	74	68	12	84	18	52	21	$10H9^{+0.036}_{0}$	6	40	$22h9^{0}_{-0.052}$

Model	O	P	Q	R	SA	SB	SC	TA	TB	UA	UB	VA	VB	WB	WB	XA	XB
NMHS3-100D	7.5	Rc1/4	23	118	9	14	21	M8×1.25	16	M8×1.25	16	$8H9^{+0.036}_{0}$	6	$102H9^{+0.087}_{0}$	4	$8H9^{+0.036}_{0}$	6
NMHS3-125D	10.5	Rc3/8	31	148	11	17.5	34	M10×1.5	20	M10×1.5	20	$10H9^{+0.036}_{0}$	8	$130H9^{+0.100}_{0}$	6	$10H9^{+0.036}_{0}$	8

NMHS4 Series
Parallel Type Pneumatic Gripper/4-Finger Type

Best for clamping square objects

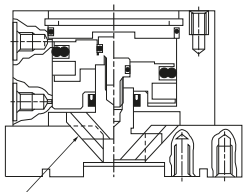

Wedge cam structure can increase clamping force

Specifications

Model		NMHS4-16D	NMHS4-20D	NMHS4-25D	NMHS4-32D	NMHS4-40D	NMHS4-50D	NMHS4-63D
Bore size(mm)		16	20	25	32	40	50	63
Fluid		Air (to be filtered by 40μm filter element)						
Operating pressure		0.2~0.6MPa			0.1~0.6MPa			
Ambient and fluid temperature		-10~+60℃						
Repeatability (mm)		±0.01						
Max.operating frequency(c.p.m)		120c.p.m.			60c.p.m.			
Lubrication		Not required						
Action		Double action						
Effective gripping force (N)at 0.5MPa Note)	External grip	10	19	31	55	88	140	251
	Internal grip	12	21	35	61	97	153	268
Finger stroke (mm)		4	4	6	8	8	12	16
Pipe size		M3×0.5			M5×0.8			
Magnetic switch		Built in magnetic ring type						
Magnetic switch model		M9P(V),M9N(V),M9B(V),F9BA			Y69A,Y59A,Y59B,Y69B,Y7BA,Y7NW			

Note: Values for Φ16 to Φ25 are with gripping point L=20mm, and for Φ16 to Φ25 with gripping point L=30mm.

Symbol

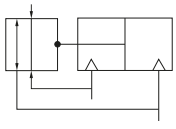

Ordering code

NMHS 4 – 20 D – M9N □

Number of fingers

4	4 fingers

Bore size

16	16mm
20	20mm
25	25mm
32	32mm
40	40mm
50	50mm
63	63mm

Acting type

D	Double acting

Number of magnetic switches

Blank	2 pcs.
S	1 pc.

Magnetic switch model

Blank	Without magnetic switch(Built-in magnet)

* Behind the magnetic switch model, Wire length representation mark: no mark: -0.5m, L-3m, Z-5m. Example: M9NL

Dimensions

NMHS4-16D~25D

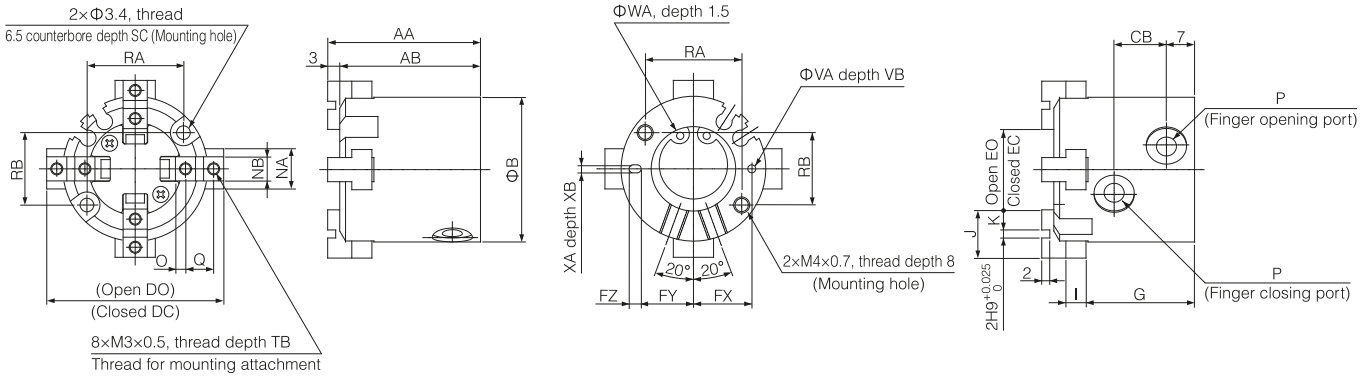

Model	AA	AB	B	CB	DC	DO	EC	EO	FX	FY	FZ	G	I	J	K	NA	NB	O	P	Q
NMHS4-16D	35	32	30	11	33	37	13	17	12.5	11	3	25	4	10	4	8	$5h9_{-0.030}^{0}$	2	M3×0.5	6
NMHS4-20D	38	35	36	13	39	43	15	19	14.5	13	3	27	5	12	5	10	$6h9_{-0.030}^{0}$	2.5	M5×0.8	7
NMHS4-25D	40	37	42	1	48	54	20	26	17	14.5	5	28	5	14	6	12	$6h9_{-0.030}^{0}$	3	M5×0.8	8

Model	RA	RB	SC	TB	VA	VB	WA	XA	XB
NMHS4-16D	18	16	8	5	$2H9^{+0.025}_{0}$	2	$17H9^{+0.043}_{0}$	$2H9^{+0.025}_{0}$	2
NMHS4-20D	24	18	9.5	6	$2H9^{+0.025}_{0}$	2	$21H9^{+0.052}_{0}$	$2H9^{+0.025}_{0}$	2
NMHS4-25D	26	22	10	6	$3H9^{+0.025}_{0}$	3	$26H9^{+0.052}_{0}$	$3H9^{+0.025}_{0}$	3

NMHS4-32D • 40D

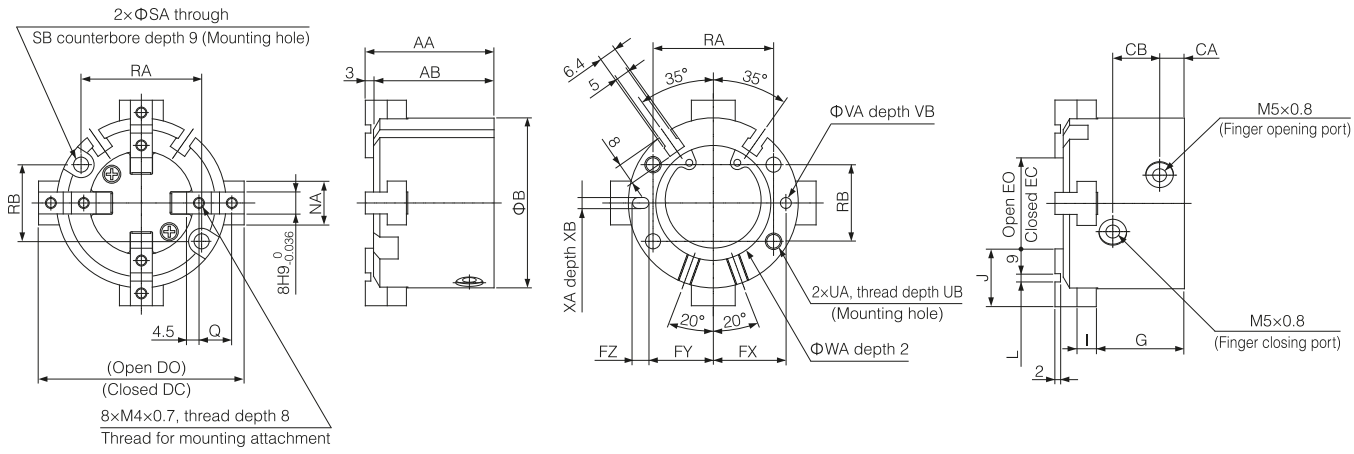

Model	AA	AB	B	CA	CB	DC	DO	EC	EO	FX	FY	FZ	G	I	J	L	NA	Q	RA	RB	SA
NMHS4-32D	44	41	56	8	16	60	68	20	28	23	20.5	5	30.5	6	20	$2H9^{+0.025}_{0}$	14	11	38	25	4.5
NMHS4-40D	47	44	62	9	17	66	74	24	32	26.5	23.5	6	32	7	21	$3H9^{+0.025}_{0}$	16	12	44	28	5.5

Model	SB	UA	UB	VA	VB	WA	XA	XB
NMHS4-32D	8	M5×0.8	10	$3H9^{+0.025}_{0}$	3	$34H9^{+0.062}_{0}$	$3H9^{+0.025}_{0}$	3
NMHS4-40D	9.5	M×61	12	$4H9^{+0.030}_{0}$	4	$42H9^{+0.062}_{0}$	$4H9^{+0.030}_{0}$	4

NMHS4-50D • 63D

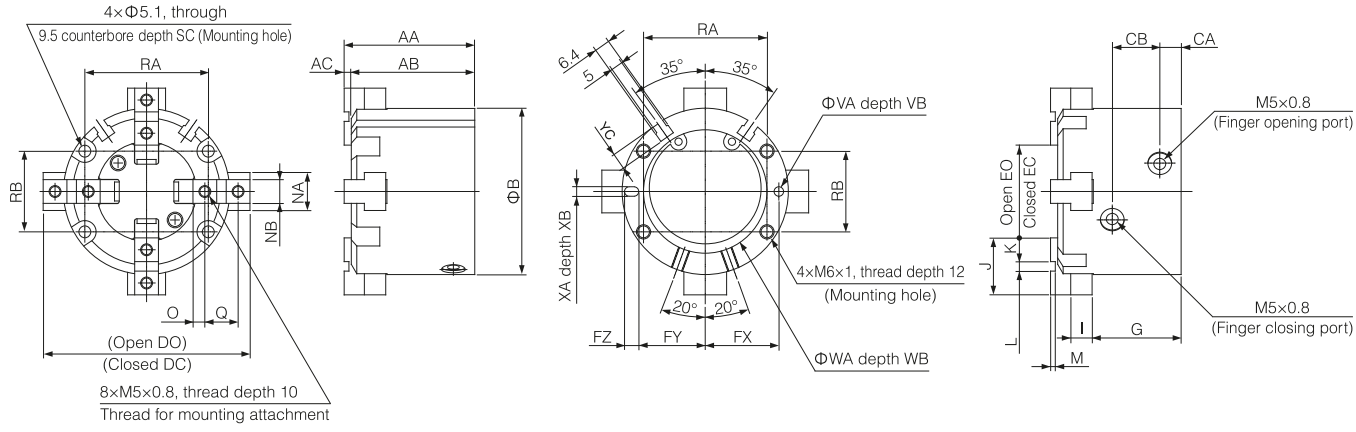

Model	AA	AB	AC	B	CA	CB	DC	DO	EC	EO	FX	FY	FZ	G	I	J	K	L	M	NA	NB
NMHS4-50D	55	52	3	70	9	20	74	86	26	38	31	28	6	37.5	9	24	10	$4H9^{+0.030}_{0}$	2	18	$10h9^{0}_{-0.036}$
NMHS4-63D	66	62	4	86	12	22	91	107	35	51	38	34.5	7	4	11	28	11	$6H9^{+0.030}_{0}$	3	24	$12h9^{0}_{-0.043}$

Model	O	Q	RA	RB	SC	VA	VB	WA	WB	XA	XB	YC
NMHS4-50D	5	14	52	34	12	$4H9^{+0.030}_{0}$	4	$52H9^{+0.074}_{0}$	2	$4H9^{+0.030}_{0}$	4	7
NMHS4-63D	5.5	17	66	38	14	$5H9^{+0.030}_{0}$	5	$65H9^{+0.074}_{0}$	2.5	$5H9^{+0.030}_{0}$	5	7.5

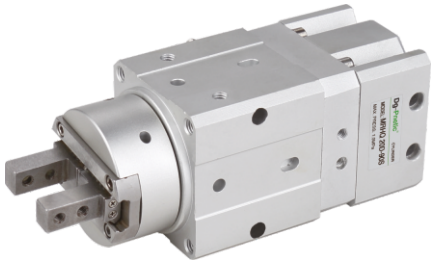

Specifications

Bore size(mm)			10	16	20	25
Fluid			Air (to be filtered by 40μm filter element)			
Gripper action			Double acting, Single acting			
Operating pressure (MPa)	Rotary unit		0.25~0.7		0.25~1.0	
	Gripper unit	Double acting	0.25~0.7	0.1~0.7		
		Single acting	0.35~0.7	0.25~0.7		
Rotation angle			90°±10°, 180°±10°			
Finger opening/closing repeatability			0.01mm			
Gripper maximum operating frequency			180c.p.m			
Ambient and fluid temperature			5 to 60℃			
Adjustable rotation time range			0.07 to 0.3s/90° (at 0.5MPa)			
Allowable kinetic energy (J)			0.0046	0.014	0.034	0.074
Finger opening/closing stroke (mm)			4	6	10	14

Ordering code

NMRH Q 10 D – 90 S – M9NV L □ – M9N L □

Rotary gripper

Gripper

Q	Parallel type: 2 fingers

Bore size

10	10mm
16	16mm
20	20mm
25	25mm

Action

D	Double acting	
S	Single acting	Normally open
C		Normally closed)

Rotation angle

90	90°
180	180°

Single vane

Magnetic switch for air claw opening and closing

N	Without magnetic switch (Built-in magnet)

Lead wire length

Blank	0.5m
L	3m
Z	5m

Magnetic switch for swing detection

Blank	Without magnetic switch (Built-in magnet)

Number of magnetic switches

Blank	2 pcs.
S	1 pc.

Dimensions

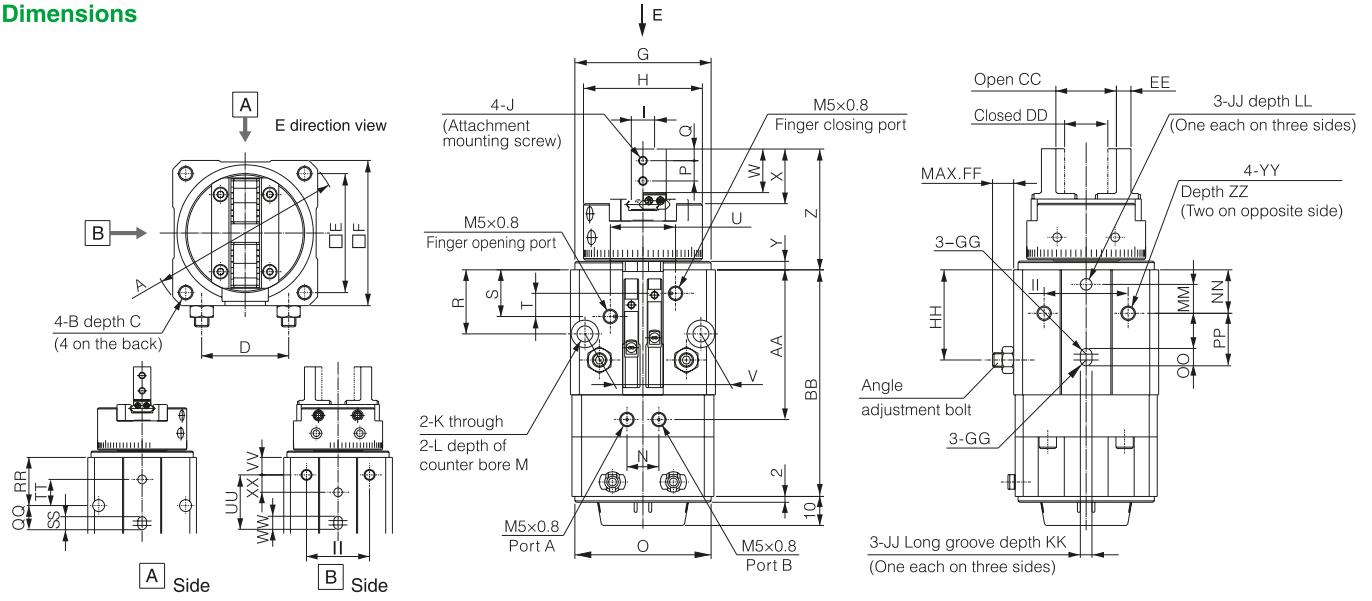

Bore size	A	B	C	D	E	F	G	H	I	J	K	L	M	N	O	P	Q	R	S	T	U	V	W	X	Y	Z	AA	BB
10	Φ54.5	M4×0.7	6	24.5	34	41	$\Phi37h9^{0}_{-0.062}$	Φ31	$5^{0}_{-0.1}$	M2.5×0.45	4.5	8	2.5	11	$\Phi37h9^{0}_{-0.062}$	5.7	3	18	11	4.5	22.5	33	12	13.7	2.5	34	41.5	63
16	Φ66.5	M5×0.8	8	30	41	50	$\Phi47h9^{0}_{-0.062}$	Φ41	$8^{0}_{-0.1}$	M3×0.5	5.5	9.5	3	11	$\Phi47h9^{0}_{-0.062}$	7	4	22	16	8	22.5	40	15	18.8	3	42	51.5	78
20	Φ78	M6×1	10	38.5	48	59	$\Phi54h9^{0}_{-0.074}$	Φ51	$10^{0}_{-0.05}$	M4×0.7	6.5	11	2.8	12	$\Phi50h9^{0}_{-0.062}$	9	5	26	19	9	24	46	20	24.5	3.4	51	62	101
25	Φ93	M6×1	10	47	58	70	$\Phi66h9^{0}_{-0.074}$	Φ64	$12^{0}_{-0.06}$	M5×0.8	8.5	14	4	12	$\Phi50h9^{0}_{-0.062}$	12	6	27.5	23	11	24	54	25	30.4	4	63	69	107

Bore size	CC	DD	EE	FF	GG	HH	II	JJ	KK	LL	MM	NN	OO	PP	QQ	RR	SS	TT	UU	VV	WW	XX	YY	ZZ
10	$15.2^{+2.2}_{0}$	$11.2^{0}_{-0.7}$	$4^{0}_{-0.1}$	6.1	R1.5	25	23	$3h9^{+0.025}_{0}$	3	4	-2	11.5	5	15.5	9	18	5	6	21	6	5	-2	M4×0.7	6
16	$20.9^{+2.2}_{-0.2}$	$14.9^{0}_{-0.7}$	$5^{0}_{-0.1}$	7.3	R2	31	29	$4h9^{+0.030}_{0}$	4	6	10	15	6	18	11	22	6	12	25	8	6	8	M5×0.8	8
20	$26.3^{+2.2}_{-0.2}$	$16.3^{0}_{-0.7}$	$8^{0}_{-0.1}$	9.2	R2	39	36	$5h9^{+0.030}_{0}$	4	6	6.5	16.5	8	27	17.5	26	8	16	27	16.5	8	-6.5	M6×1	9
25	$33.3^{+2.5}_{-0.2}$	$19.3^{0}_{-0.8}$	$10^{0}_{-0.1}$	14	R3	45	42	$6h9^{+0.030}_{0}$	4	8	7	17	8	32	21.5	27.5	8	17.5	32	17	8	-7	M8×1.25	12

Symbol

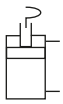

Product feature

1. The material of seals guarantees the reliable performance of the cylinder that is used under various conditions.
2. Three-slot guide structure leads to high guide precision.
3. There are single and double side clamping fingers can be selected (90°).
4. Levorotatory and dextrorotary are available; 90° and 180°.
5. The material of piston rod is made from special alloy steel, which has longer life after heat treatment.

Specifications

Bore size(mm)	25	32	40	50	63
Acting type	Double acting				
Fluid	Air (to be filtered by 40μm filter element)				
Operating pressure	0.15~1.0MPa(22~145psi)				
Proof pressure	1.5MPa(215psi)				
Temperature (℃)	-20~70				
Speed range (mm/s)	50~200				
Stroke tolerance	$^{+1.0}_{0}$				
Rotary angle tolerance	±1.5°				
Cushion type Note1)	No cushion				
Port size Note 2)	M5×0.8	1/8"			

Note: 1. If there is no buffering device, exhaust throttle shall be added to achieve buffering effect.
2. PT thread, G thread and NPT thread are available.

Stroke

Bore size(mm)	Stroke type	90°	180°	Total stroke(90°/180°)
25	Rotation stroke	14	20	26
32	Clamping stroke	12	6	26
40	Rotation stroke	15	21	27
	Clamping stroke	12	6	27
50	Rotation stroke	15	21	29
63	Clamping stroke	14	8	29

Ordering code

ACK — **Model**

ACK	Twist clamp cylinder (Double acting type)
ACKD	Twist clamp cylinder (Double push plate type, only for 90°)

L — **Rotary direction**

L	Push and turn left When the piston of cylinder moves downward, the swivel arms moves anticlockwise, this is called levorotatory.
R	Push and turn right When the piston of cylinder moves downward, the swivel arms moves clockwise, this is called dextrorotary.

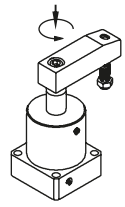

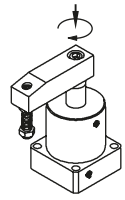

25 × **90** — **Bore size**

25	25mm
32	32mm
40	40mm
50	50mm
63	63mm

Rotary angle

90	90°
180	180°

□ — **Thread type** Note)

Blank	PT
G	G
T	NPT

Note: When the thread is standard, the code is blank.

Inner structure and material of major parts

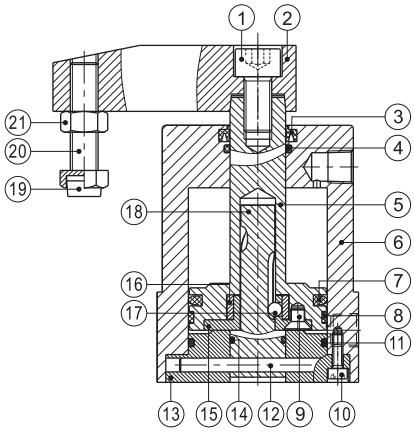

NO.	Item	Material	NO.	Item	Material
1	Screw	Carbon steel	12	Fixed pin	S45C
2	Rocker	Carbon steel	13	Back cover	Aluminum alloy
3	Rod packing	NBR	14	O-ring	NBR
4	O-ring	NBR	15	Push block	SCr440
5	Piston rod	S45C	16	Bushing	SCr440
6	Body	Aluminum alloy	17	Steel ball	Carbon steel
7	Piston seal	NBR	18	Rotary axis	SCr440
8	Wear ring	Wear resistant matrial	19	Bumper	PTFE
9	Screw	Carbon steel	20	Screw	Carbon steel
10	Screw	Carbon steel	21	Nut	Carbon steel
11	O-ring	NBR			

Dimensions

ACK

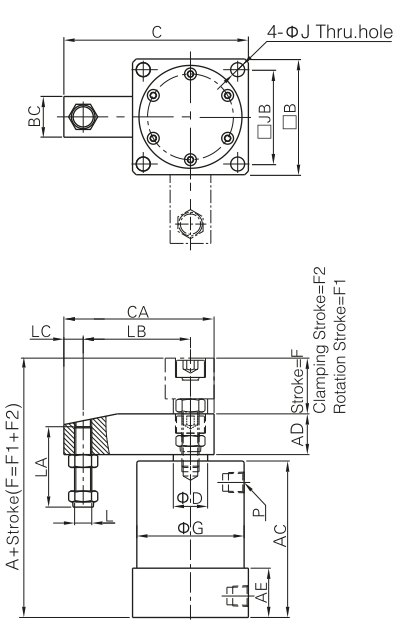

ACKD

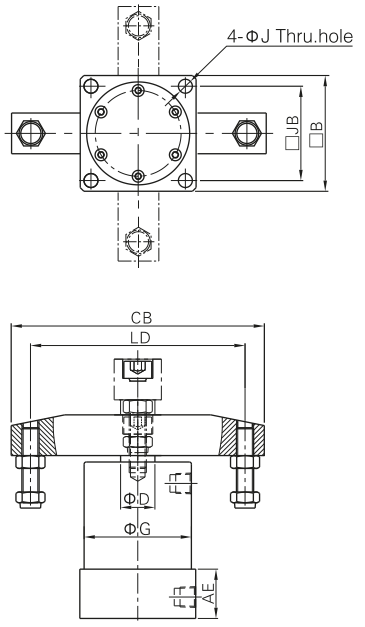

Bore size\Item	A	AC	AD	AE	B	BC	C	CA	CB	D	F(90°/180°)	F1(90°)	F1(180°)	F2(90°)	F2(180°)	G	J	JB	L	LA	LB	LC	LD	P
25	85	65	16	23	40	16	58	48	76	14	26	14	20	12	6	35	4.5	30	M6×1.0	29.5	30	8	60	M5×0.8
32	95	73	19	23	54	19	86	70	118	16	26	14	20	12	6	50	6.5	44	M8×1.25	37.5	50	9	100	1/8"
40	97	74	19	26	58	19	88	70	118	16	27	15	21	12	6	55	6.5	48	M8×1.25	37.5	50	9	100	1/8"
50	109.5	80	25.5	26	68	25.5	114	93	160	20	29	15	21	14	8	60	8.5	55	M10×1.5	45	70	10	140	1/8"
63	115.5	86	25.5	30	82	25.5	121	93	160	20	29	15	21	14	8	70	8.5	64	M10×1.5	45	70	10	140	1/8"

How to select product

1. When arms are to be made separately, their length and weight should be within the following range.

2. Allowable bending moment:
   Use the arm length and operating pressure within graph(1) for allowable bending moment loaded piston rod.

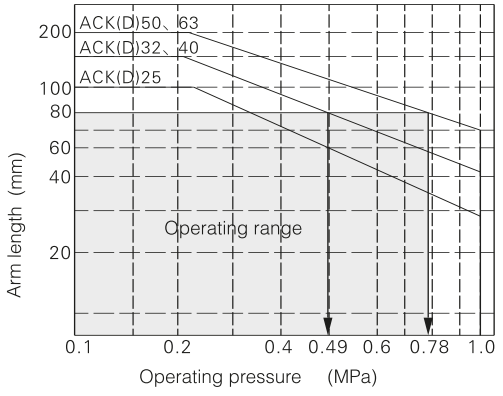

Example: When arm length is 80mm, pressure should be less than

ACK32/40: 0.59MPa ACK50/63: 0.78MPa

3. Moment of inertia:
   When the arm is long and heavy, damage of internal parts may be caused due to inertia.Use the inertia moment and cylinder speed within graph(2) based on arm requirement.

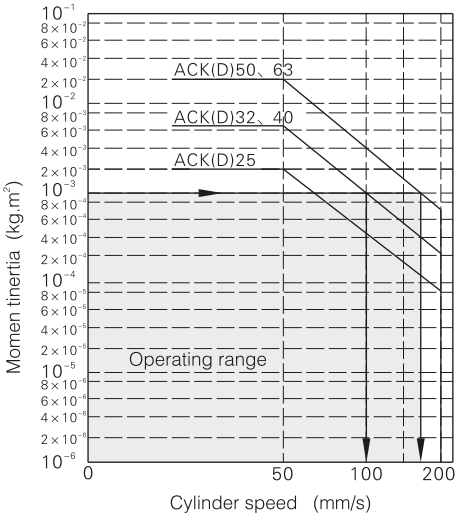

Example: When arm's moment of inertia is 10^{-3}Kg · m^2 cylinder speed should be less than

ACK32/40: 100mm/s

ACK50/63: 170mm/s

Note: The average speed of piston=the highest speed of piston/1.6

4. Moment of inertia of cylinder's arm when rotating based on its rotary axis,shown in graph(3).

Model	Moment of inertia (Kg·m²)
ACK25 with single arm	2.006×10^{-5}
ACK25with double arms	7.651×10^{-4}
ACK32\40 with single arm	1.271×10^{-4}
ACK32\40 with double arms	4.148×10^{-4}
ACK50\63 with single arm	9.614×10^{-3}
ACK50\63with double arms	1.888×10^{-3}

5. Calculation reference:

5.1) Moment of inertia of arm(I_1): Refer to the graph(3) after the cylinder bore diameter is determined.

5.2) Moment of inertia of jig (I_2): According to shape of the jig and the next item 6 "Calculation for moment of inertia", pick out a proper formula for calculation. The jig shown on the right graph is a cylinder, its formula of moment of inertia is:

$I_2=(m_2*D*D)/8+m_2*L*L$

When ACK32 is selected: L=0.05m(arm length);

If D=0.04m $m_2=0.4$kg

From graph(3): $I_1=1.271\times10^{-4}(kg\cdot m^2)$

By Calculation: $I_2=(m_2*D*D)/8+m_2*L*L=(0.4*0.04*0.04)/8+0.4*0.05*0.05$

$=10.8\times10^{-4}(kg\cdot m^2)$

Total value: $I=I_1+I_2=12.071\times10^{-4}=1.2071\times10^{-3}(kg\cdot m^2)$

According to graph(2), the highest speed of the cylinder should be less than 95 mm/s;

According to graph(1), it can be used under a pressure of 0.9Mpa. The average speed of piston=the highest speed of piston/1.6=59 mm/s.

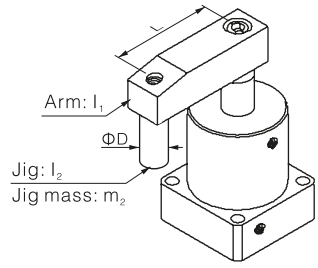

6. Calculation for moment of inertia

Diagram	Calculation formula of moment of inertia	Diagram	Calculation formula of moment of inertia
1. Thin bar Position of rotary axis: Vertical to the bar and through the end 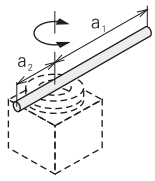	$I=\frac{m_1a_1^2+m_2a_2^2}{3}$	4. Thin rectangular plate (Cube) Position of rotary axis: Parallel to side b and through the center of gravity 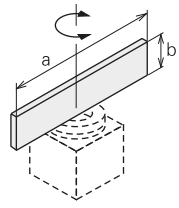	$I=\frac{ma^2}{12}$
2. Thin bar Position of rotary axis: Vertical to the bar and through the center of gravity 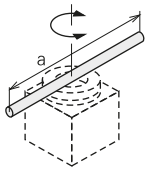	$I=\frac{ma^2}{12}$	5. Thin rectangular plate (Cube) Position of rotary axis: Vertica to the plate and through the end 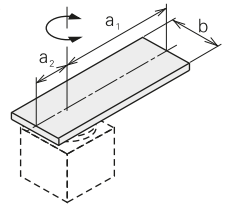	$I=m_1\times\frac{4a_1^2+b^2}{12}+m_2\times\frac{4a_2^2+b^2}{12}$
3. Load at the end of lever arm 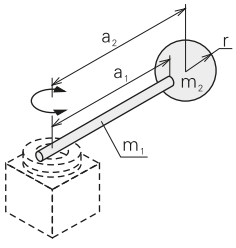	$I=m_1\times\frac{a_1^2}{3}+m_2\times a_2^2+k$ $k=m_2\times\frac{2r^2}{5}$	6. Thin rectangular plate (Cube) Position of rotary axis: Through the center of gravity and vertical to the plate(Same as also thick rectanglaur plate) 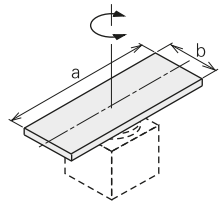	$I=\frac{ma^2+mb^2}{12}$

Specifications

Bore size(mm)	25	32	40	50	63
Action form	Double acting				
Using fluids	Air				
Operating pressure range	1.5~9.5 kgf/cm²(150~950 MPa)				
Service temperature (℃)	0~60				
Speed of use (mm/sec)	30~500				
Slewing stroke (mm)	11	13		15	
Down stroke (mm)	11	13		15	
Rotation angle	90° Customizable(0°, 45°, 60°)				
Rotation direction	Turn left (right to left) -L, turn right (left to right) -R				
Buffer type	Rubber gasket cushion				
lubrication	Free supply mode				
Pipe size	M5×0.8				

Ordering code

SRC — **R** — **32** × **13** – **D**

Model

SRC	Rotary clamp cylinder

Rotation direction

L	Left turn
R	Right turn

Bore size

25	25mm
32	32mm
40	40mm
50	50mm
63	63mm

Stroke

Φ25	11mm
Φ32	13mm
Φ40	13mm
Φ50	15mm
Φ63	15mm

Stroke indicates downforce stroke
(swing travel not included)

Press plate type

Blank	Single side pressing plate
D	Bilateral pressing plate

Note: Φ25 without double side pressing plate

Dimensions

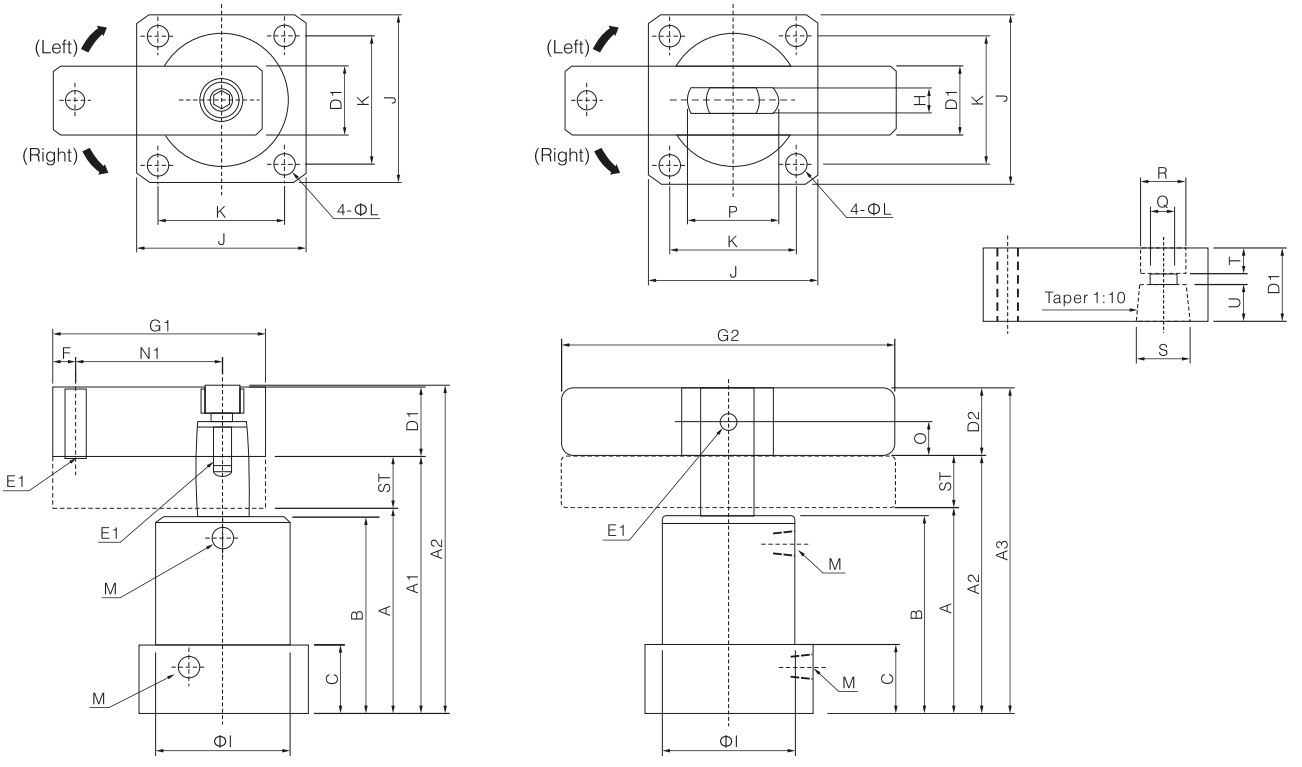

Bore size(mm)	ST	A	A1	A2	A3	B	C	D1	D2	E1	E2	F	G1	G2	H	I	J	K	L	M	N1	O	P	Q	R	S	T	U
25	22	67	89	(80)	-	65	23	□15.9	-	M6×1.0p	-	6	50	–	-	35	38	30	4.6	M5×0.8P	35	-	-	6.8	11.5	14	5	8.5
32	26	82	108	(100)	127	78	28	□19	□19	M8×1.25p	8	8	70	140	9	46	50	40	5.6	1/8"	50	9.5	23	9	14	16	7	9.5
40	26	82	108	(104)	127	78	28	□19	□19	M8×1.25p	8	8	70	140	9	55	60	48	5.8	1/8"	55	9.5	23	9	14	16	7	9.5
50	30	94	124	(117)	146.2	90	31	□25.4	□22.2	M10×1.5p	8	10	95	160	10	65	70	58	6.8	1/8"	60	11.1	29	11	18	20	9	12.5
63	30	94	124	(117)	146.2	90	31	□25.4	□22.2	M10×1.5p	8	10	95	160	10	78	83	67	9	1/8"	70	11.1	29	11	18	20	9	12.5

Specifications

Bore size(mm)	12	16	20	25	32	40	50	63
Acting type	Double acting							
Fluid	Air (to be filtered by 40μm filter element)							
Operating pressure	0.15~1.0MPa(22~145psi)(1.5~10bar)							
Proof pressure	1.5MPa(215psi)(15bar)							
Temperature	-20~70℃							
Speed range (mm/s)	50~200							
Rotation angle	90°							
Repeatability	±2°							
Rotation direction	Turn left of turn right							
Rotation stroke (mm)	7.5		9.5		15		19	
Clamping stroke (mm)	10 20	10 20 30			10 20 30 50			
Stroke tolerance	$^{+1.0}_{0}$							
Cushion type	Bumper							
Port size Note)	M5×0.8				1/8"		1/4"	

Note: PT thread, G thread and NPT thread are available.

Symbol

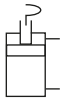

Product feature

1. It can be used on welding fixture, the QPQ surface treatment prevent piston rod damage by welding slag; better than chrome plated piston rod.
2. The front cover with stainless steel dust scraping ring,can keep the dust and welding slag out, and protect cylinder internal parts.
3. The mounting dimension of body is the same as ACQ series, can use ACQ series accessories.

Ordering code

QCK L 32 × 10 S M FB □

Model

QCK	Rotary clamp cylinder

Rotation direction

L	Push and turn left
R	Push and turn right

Bore size

12	12mm
16	16mm
20	20mm
25	25mm
32	32mm
40	40mm
50	50mm
63	63mm

Clamping stroke

Bore size	Clamping stroke
Φ12	10 20
Φ16~25	10 20 30
Φ32~63	10 20 30 50

Magnet

S	With magnet

Rod type

Blank	Taper type(with clamp arm)
M	Across flat position type(without clamp arm)

Mounting type Note 1)

Blank	No bracket
FB	FB type

Thread type Note 2)

Blank	PT
G	G
T	NPT

Note: 1. Back flange is same as ACQ series (please refer right table), if need front flange, please contact us.
2. When the thread is standard,the code is blank.

Bore size\Accessories	FB	Material	Bore size\Accessories	FB	Material
12	F-ACQ12FA	Aluminum alloy	32	F-ACQ32FA	Aluminum alloy
26	F-ACQ16FA		40	F-ACQ40FA	
20	F-ACQ20FA		50	F-ACQ50FA	
25	F-ACQ25FA		63	F-ACQ63FA	

The definition of rotation direction and angle

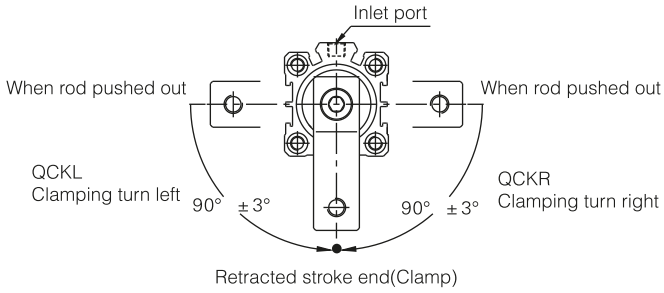

Levorotatory(QCKL):
when the piston of cylinder moves downward,the swivel arms moves anticlockwise,this is called levorotatory.

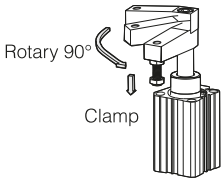

The order code is L

Dextrorotary(QCKR):
When the piston of cylinder moves downward,the swivel arms moves clockwise.this is called dextrorotary.

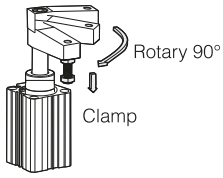

The order code is R

Inner structure and material of major parts

QCK

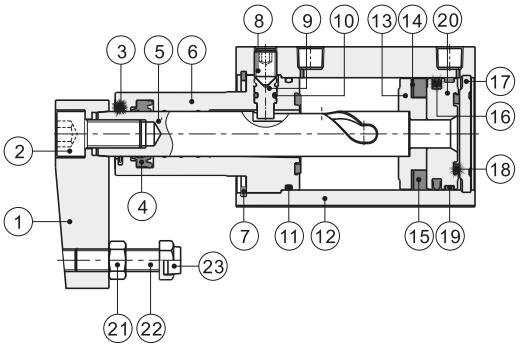

NO.	Item	Material	NO.	Item	Material
1	Rocker	Carbon steel	14	Magnet washer	NBR
2	Screw	Carbon steel	15	Magnet	Sintered metal Neodymium -iron-boron(Φ12~Φ25)
3	Dust scraping ring	No(Φ12, Φ16) Stainless steel(Others)			Plastic(Others)
4	Front cover packing	NBR	16	Piston seal	NBR
5	Piston rod	Scr440	17	Back cover	Aluminum alloy
6	Front cover	Aluminum alloy	18	Bumper	TPU(Φ12~Φ25)\NBR(Others)
7	C Clio	Spring steel	19	Wear ring	No(Φ12~Φ32) Wear resistant material(Others)
8	Screw	Carbon steel			
9	Operating screw	SCr440	20	Piston	Brass(Φ12,Φ16) Aluminum alloy(Others)
10	O-ring	NBR			
11	O-ring	NBR	21	Screw	Carbon steel
12	Body	Aluminum alloy	22	Fixing screw	Carbon steel
13	Magnet holder	Brass(Φ12, Φ16) Aluminum alloy(Others)	23	Bumper	PTFE(Φ12~Φ40POM(Others)

Dimensions

QCK□(Taper type with clamp arm)

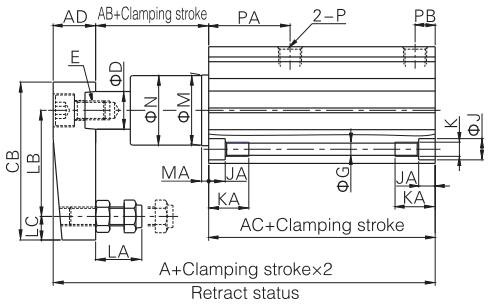

Φ32~Φ63

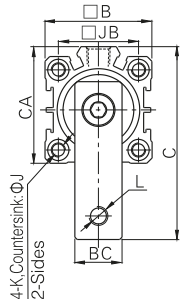

Φ20~Φ25

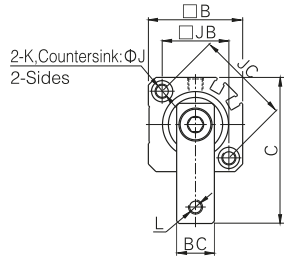

Φ12~Φ16

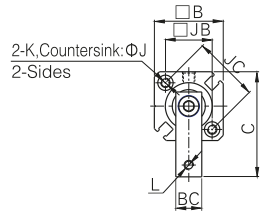

Bore size\Item	A	AB	AC	AD	B	BC	C	CA	CB	D	E	G	J	JA	JB	JC	K	KA	L	LA	LB	LC	M	MA	N	P	PA	PB
12	55	10.5	35.5	9	25	9	36.5	-	29	6	M3×0.5	3.3	6	3.5	15.5	22	M4×0.7	11	M4×0.7	7~13	20	4	11	3	10.8	M5×0.8	13.5	5.5
16	59	10.5	35.5	13	29	11	44.5	-	36	8	M5×0.8	3.3	6	3.5	20	28	M4×0.7	11	M4×0.7	7~13	25	5	14	3	13.8	M5×0.8	15	5.5
20	86	8	62	16	36	16	60	-	51	12	M8×1.25	5	9	5.5	25.5	36	M6×1.0	17	M6×1.0	9.5~20.5	35	7	18	3	17.8	M5×0.8	30	6
25	87	8	63	16	40	16	62	-	51	12	M8×1.25	5	9	5.5	28	40	M6×1.0	17	M6×1.0	9.5~20.5	35	7	23	6	22.5	M5×0.8	30	7
32	108	17.5	71.5	19	45	19	82	49.5	67	16	M10×1.5	5	9	5.5	34	-	M6×1.0	17	M8×1.25	13.5~25.5	45	10	30	7	29.5	1/8"	34.5	8.5
40	109	25	65	19	53	19	85.5	57	67	16	M10×1.5	5	9	5.5	40	-	M6×1.0	17	M8×1.25	13.5~25.5	45	10	30	3	29.5	1/8"	26.5	9
50	133	31	76.5	25.5	64	25.5	114	71	88	20	M12×1.75	6.5	10.5	6.5	50	-	M8×1.25	22	M10×1.5	14.5~30	65	10	37	3.5	36.5	1/4"	34	11.5
63	136	30.5	80	25.5	77	25.5	120.5	84	88	20	M12×1.75	8.5	14	9	60	-	M10×1.5	28.5	M10×1.5	14.5~30	65	10	48	3.5	47.5	1/4"	34.5	11.5

QCK□M(Across flat positon type without clamp arm)

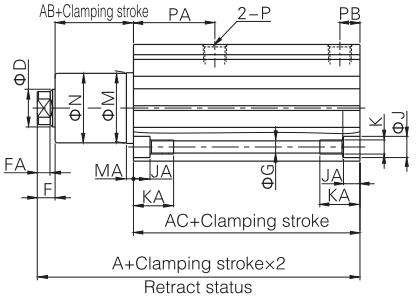

Φ32~Φ63

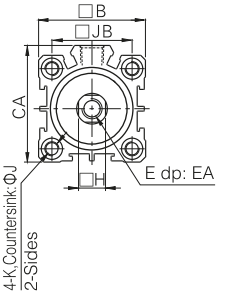

Φ20~Φ25

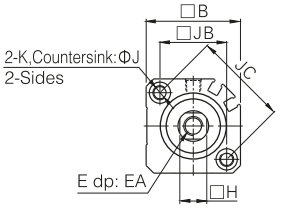

Φ12~Φ16

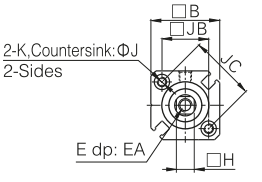

Bore size\Item	A	AB	AC	B	CA	D	F	FA	H	E	EA	G	J	JA	JB	JC	K	KA	M	MA	N	P	PA	PB
12	48	9.5	35.5	25	-	6	3	2.5	5	M3×0.5	6	3.3	6	3.5	15.5	22	M4×0.7	11	11	3	10.8	M5×0.8	13.5	5.5
16	48	9.5	35.5	29	-	8	3	2.5	7	M5×0.8	7	3.3	6	3.5	20	28	M4×0.7	11	14	3	13.8	M5×0.8	15	5.5
20	72.5	6.5	62	36	-	12	4	3	10	M8×1.25	13	5	9	5.5	25.5	36	M6×1.0	17	18	3	17.8	M5×0.8	30	6
25	73.5	6.5	63	40	-	12	4	3	10	M8×1.25	13	5	9	5.5	28	40	M6×1.0	17	23	6	22.5	M5×0.8	30	7
32	93.5	15.5	71.5	45	49.5	16	6.5	5.5	14	M10×1.5	15	5	9	5.5	34	-	M6×1.0	17	30	7	29.5	1/8"	34.5	8.5
40	94.5	23	65	53	57	16	6.5	5.5	14	M10×1.5	15	5	9	5.5	40	-	M6×1.0	17	30	3	29.5	1/8"	26.5	9
50	112	28	76.5	64	71	20	7.5	5.5	17	M12×1.75	20	6.5	10.5	6.5	50	-	M8×1.25	22	37	3.5	36.5	1/4"	34	11.5
63	115	27.5	80	77	84	20	7.5	5.5	17	M12×1.75	20	8.5	14	9	60	-	M10×1.5	28.5	48	3.5	47.5	1/4"	34.5	11.5

Q□K-FB(With flange)

Φ32~Φ63

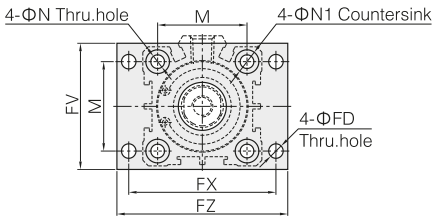

Φ12~Φ25

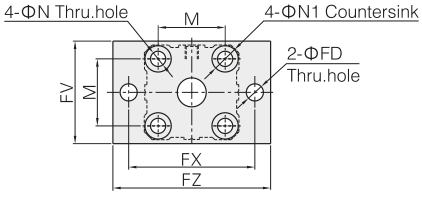

QCK□-FB
(Taper type with clamp arm)

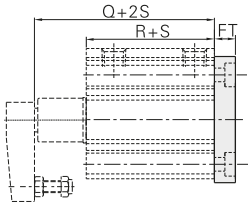

QCK□M-FB
(Across flat position rod without clamp arm)

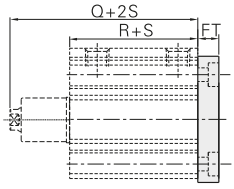

Bore size\Item	R	Q(QCK□)	Q(QCK□M)	M	N	N1	FD	FT	FV	FX	FZ
12	35.5	46	48	15.5	4.5	7.5	4.5	5.5	25	45	55
16	35.5	46	48	20	4.5	7.5	4.5	5.5	30	45	55
20	62	70	72.5	25.5	6.5	10.5	6.5	8	39	48	60
25	63	71	73.5	28	6.5	10.5	6.5	8	42	52	64
32	71.5	89	93.5	34	6.5	10.5	5.5	8	48	56	65
40	65	90	94.5	40	6.5	10.5	5.5	8	54	62	72
50	76.5	107.5	112	50	8.5	13.5	6.5	9	67	76	89
63	80	110.5	115	60	10.5	16.5	9	9	80	92	108

Installation and operation

1. To insure the life-span of cylinder and jig, please use flow control valve to control the speed of cylinder.
2. The method of installation are mounted by flange on top of bottom.
3. Before the cylinder is connected to pipeline, sundries in the pipe must be eliminated,or may cause leakage.
4. Please clean the piston-rod and dust scraping ring to protect the cylingder.
5. The cylinder using normal magnet ring can use the same sensor as ACQ series. For the cylinder using strong magnet ring we suggest using CS1-69AM sensor.
6. Because the rotary force is strong when the cylinder's acting, we suggest using flow control valve to control the speed to protect cylinder.
7. Please install the cylinder following the right diagram.
8. The installation method as the diagram below is wrong, and will injure the cylinder and shorten the cylinder life.

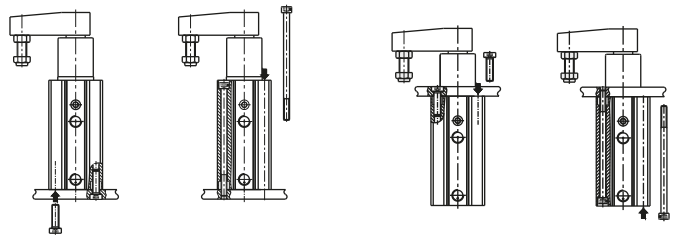

Mounting on bottom　　Mounting on top

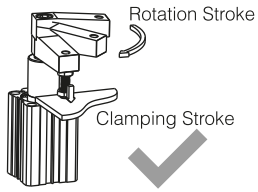

Only can clamping in clamping stroke.

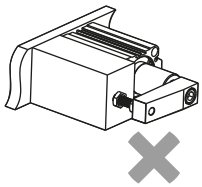

Don't installed horizontally

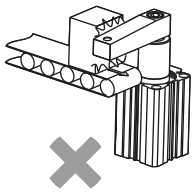

Don't exert horizontally load or force

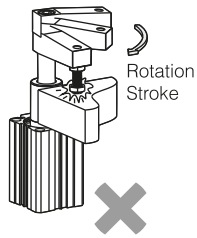

Please don't clamp when rotating.

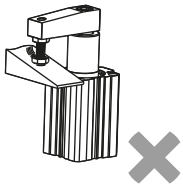

Please don't clamp on bevel

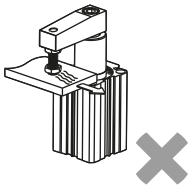

Do not more the workpiece when clamped

9. Rocker
9.1 The design of rocker can keep it stable and can change direction by customer.
9.2 Please follow the diagram below on right side to assemble/disassemble the rocker by spanner and allen wrench; don't hold the body to assemble/disassemble rocker, or will damage the cylinder.
9.3 If need customize rocker, please contact us.

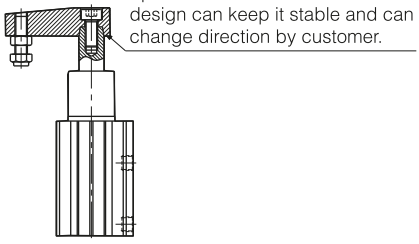

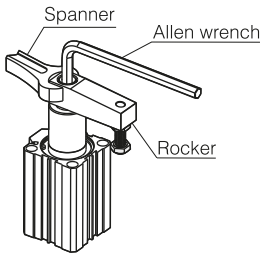

How to select product

1. When arms are to be made separately, their length and weight should be within the following range.
2. Allowable bending moment:
   Use the arm length and operating pressure within graph(1) for allowable bending moment loaded piston rod.

Graph(1)

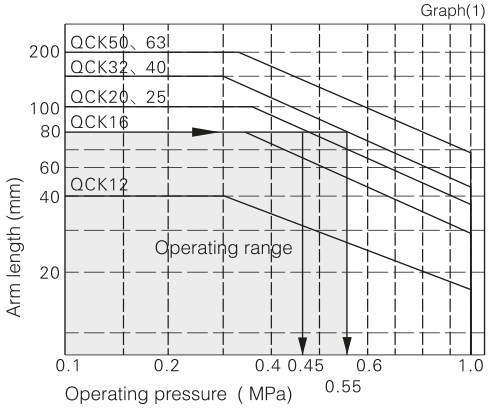

Example: When arm length is 80mm,pressure should be less than: QCK20/25: 0.45MPa, QCK32/40: 0.55MPa

3. Moment of inertia:
   When the arm is long and heavy, damage of internal parts may be caused due to inertia. Use the inertia moment and cylinder speed within graph(2) based on arm requirement.

Graph(2)

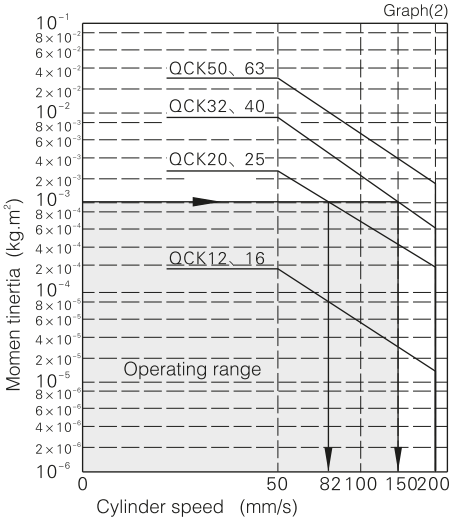

Example: When arm's moment of inertia is 10^{-3}Kg · m², cylinder speed should be less than
QCK20/25: 82mm/s
QCK32/40: 150mm/s

Note: The average speed of piston=the highest speed of piston/1.6

4. Moment of inertia of cylinder's arm when rotating based on its rotary axis, shown in graph(3):

Graph(3)

Model	Moment of inertia(Kg·m²)
QCK12	3.555×10^{-6}
QCK16	1.053×10^{-5}
QCK20/25	5.257×10^{-5}
QCK32/40	1.653×10^{-4}
QCK50/63	7.387×10^{-4}

5. Calculation reference:

5.1 Moment of inertia of arm (I_1) : Refer to the graph(3) after he cylinder bore diameter is determined.

5.2 Moment of inertia of jig (I_2) : According to shape of the jig and the next item 6 "Calculation for moment of inertia", pick out a proper formula for calculation.
The jig shown on the right graph is a cylinder, its formula of moment of inertia is: $I_2=(m_2*D*D)/8+m_2*L*L$
When QCK32 is selected: L=0.045m(arm length); If D=0.04m m_2=0.4kg
From graph(3): $I_1=1.653\times10^{-4}$(Kg·m²)

By Calculation: $I_2=(m_2*D*D)/8+m_2*L*L=(0.4*0.04*0.04)/8+0.4*0.045*0.045=8.9\times10^{-4}$(Kg·m²)

Total value: $I=I_1+I_2=10.553\times10^{-4}=1.0553\times10^{-3}$(Kg·m²)

According to graph(2), the highest speed of the cylinder should be less than 150mm/s; According to graph(1), it can be used under a pressure of 0.9Mpa. The average speed of piston=the highest speed of piston/1.6=94mm/s.

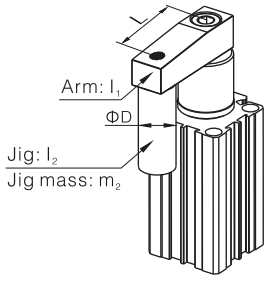

6. Calculation for moment of inertia:

Diagram	Calculation formula of moment of inertia	Diagram	Calculation formula of moment of inertia
1. Thin bar Position of rotary axis: Vertical to the bar and through the end 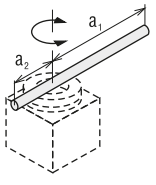	$I=\frac{m_1a_1^2+m_2a_2^2}{3}$	4. Thin rectangular plate (Cube) Position of rotary axis: Parallel to side b and through the center of gravity 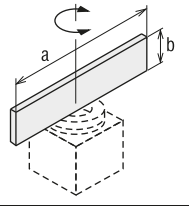	$I=\frac{ma^2}{12}$
2. Thin bar Position of rotary axis: Vertical to the bar and through the center of gravity 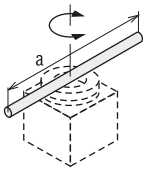	$I=\frac{ma^2}{12}$	5. Thin rectangular plate (Cube) Position of rotary axis: Vertica to the plate and through the end 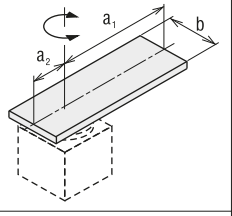	$I=m_1\times\frac{4a_1^2+b^2}{12}+m_2\times\frac{4a_2^2+b^2}{12}$
3. Load at the end of lever arm 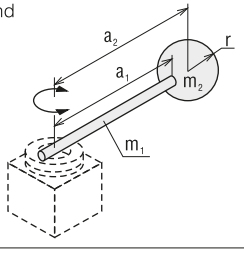	$I=m_1\times\frac{a_1^2}{3}+m_2\times a_2^2+k$ $k=m_2\times\frac{2r^2}{5}$	6. Thin rectangular plate (Cube) Position of rotary axis: Through the center of gravity and vertical to the plate(Same as also thickrectanglaur plate) 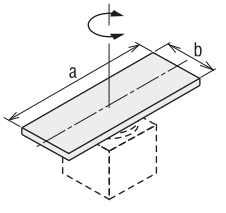	$I=\frac{ma^2+mb^2}{12}$

Specifications

Bore size(mm)	40	50	63
Fluid	Air		
Proof pressure	1.5 MPa		
Maximum operating pressure	1.0 MPa		
Minimum operating pressure	0.05 MPa		
Ambient and fluid temperature	Without magnetic switch: -10℃ to 70℃ With magnetic switch: -10℃ to 60℃		
Piston speed (mm/s)	50 to 500		
Cushion	Unclamped side (head end): With air cushion		
Speed controller	Equipped on both ends		
Lubrication	Non-lube		
Stroke length tolerance	$^{+1.0}_{0}$		
Mounting Note)	Double clevis		

Note: A clevis pin, cotter pins, flat washers are equipped as a standard.

Standard stroke table

Bore size(mm)	Standard stroke (mm)
40	50, 75, 100, 125, 150
50, 63	50, 75, 100, 125, 150, 200

Ordering code

Without magnetic ring	NCK1	A	50	□	–	100		Y	□	Z
Standard magnetic ring built-in type	NCKG1	A	50	□	–	100		Y	□	Z

Clevis width

A	16.5 mm
B	19.5 mm

Bore size

40	40mm
50	50mm
63	63mm

Thread type

Blank	Rc1/4
TN	NPT1/4
TF	G1/4

Stroke

Φ40	50, 75, 100, 125, 150
Φ50	50, 75, 100, 125, 150, 200
Φ63	50, 75, 100, 125, 150, 200

End bracket

Blank	None
I	Single knuckle joint (M6 without tap)
IA	Single knuckle joint (M6 with tap)
Y	Double knuckle joint (M6 without tap)
YA	Double knuckle joint (M6 with tap)

Note: A knuckle pin, cotter pins and flat washers are provided as a standard for Y and YA.

Option

Blank	None
B	Limit switch mounting base
D	Dog fitting Note 1)
L	Foot
K Note 2)	Pedestal (for 75, 100, 150 strokes only)

Note 1: When the dog fitting is selected, choose the rod end bracket IA or YA (M6 with tap).
2: Only available for clevis width A (16.5 mm)

End bracket/Options

Symbol	Description		Part No.	
			NCK1A/NCKG1A	NCK1B/NCKG1B
I	Single knuckle joint	M6 without tap	NCKB-I04	
IA		M6 with tap	NCKB-IA04	
Y	Double knuckle joint (A knuckle pin, cotter pins, flat washers are equipped as a standard.)	M6 without tap	NCKA-Y04	NCKB-Y04
YA		M6 with tap	NCKA-YA04	NCKB-YA04

Theoretical output

Unit: N

Bore size (mm)	Rod size (mm)	Operating direction	Piston area (mm^2)	Operating pressure (MPa)			
				0.3	0.4	0.5	0.6
40	20	OUT	1260	378	504	630	756
		IN	943	283	377	472	566
50	20	OUT	1960	588	784	980	1180
		IN	1650	495	660	825	990
63	20	OUT	3120	934	1250	1560	1870
		IN	2800	840	1120	1400	1680

Dimensions

NCK□1□40, 50, 63 Band mounting type

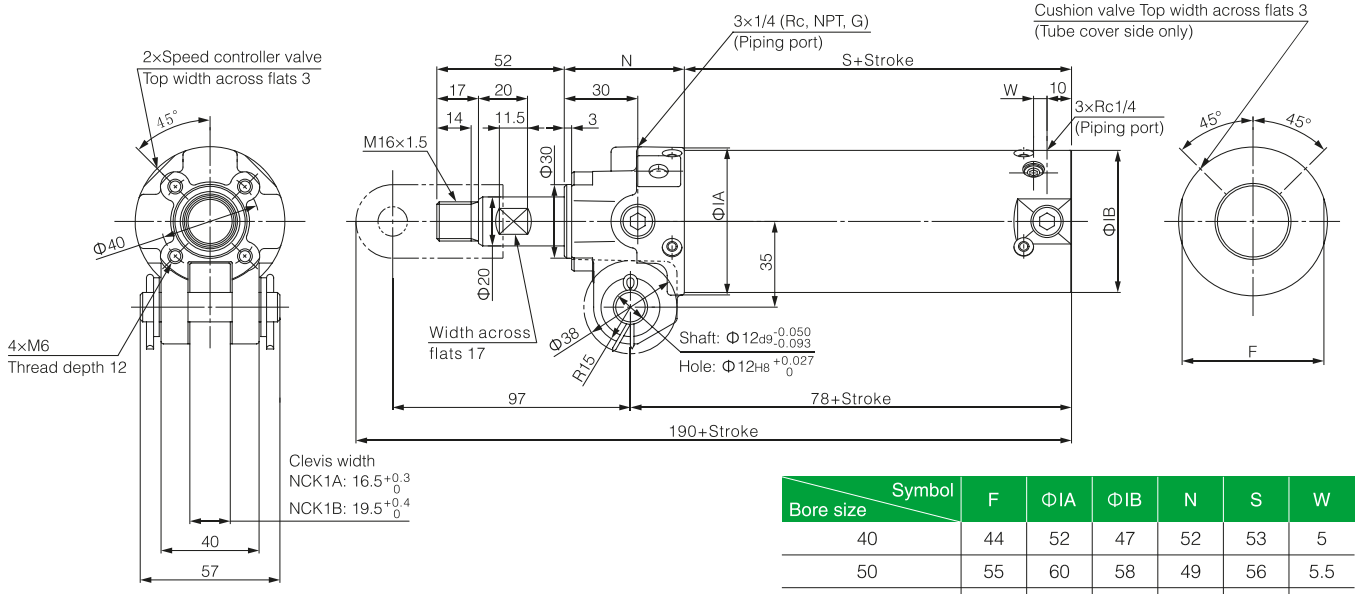

Bore size \ Symbol	F	ΦIA	ΦIB	N	S	W
40	44	52	47	52	53	5
50	55	60	58	49	56	5.5
63	69	74	72	49	56	5.5

End bracket

Single knuckle joint

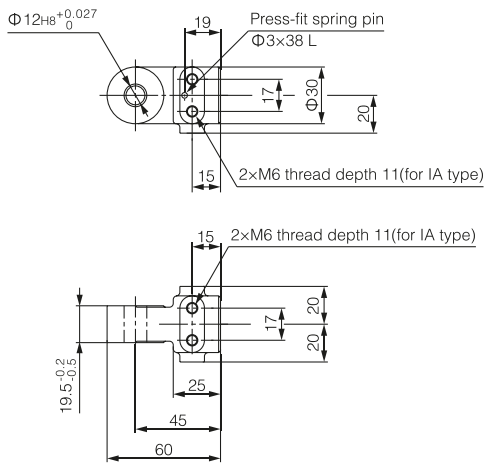

Material: Cast iron

Part No.	End bracket symbol	Applicable clamp cylinder
NCKB-I04	I (M6 without tap)	NCK□1A series NCK□1B series
NCKB-IA04	IA (M6 with tap)	

Note: 1. A spring pin is attached to the single knuckle joint as a standard.
2. The current model is equivalent to the component part number NCKB-IA04 (end bracket symbol IA).

Double knuckle joint

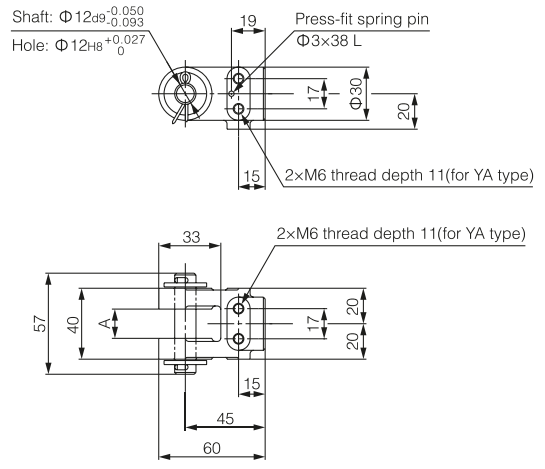

Material: Cast iron

Part No.	End bracket symbol	A	Applicable clamp cylinder
NCKA-Y04	Y (M6 without tap)	16.5 +0.3 0	NCK□1A series
NCKA-YA04	YA (M6 with tap)		
NCKB-Y04	Y (M6 without tap)	19.5 +0.4 0	NCK□1B series
NCKB-YA04	YA (M6 with tap)		

Note: 1. A knuckle pin, cotter pins, flat washers and a spring pin are attached to the double knuckle joint as a standard.
2. The current model is equivalent to the component part number NCKA-YA04, NCKB-YA04 (end bracket symbol YA).

Pin

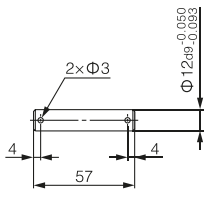

Material: Carbon steel

Part No.	Usage
NCK-P04	Knuckle pin Clevis pin

Note: Cotter pins and flat washers are attached to the pin as a standard.

NCK1 Series options

Limit switch mounting base/Dog fitting

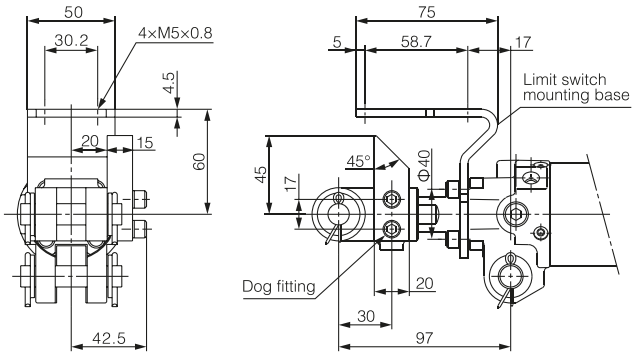

Material: Rolled steel

Part No.	Option symbol	Name	Applicable clamp cylinder
NCK-B04	B	Limit switch mounting base	NCK□1A series NCK□1B series
NCK-D04	D	Dog fitting	

Note: 1. Limit switch mounting base and dog fitting can be repositioned by removing the hexagon socket head cap screw.
2. When ordering the limit switch mounting base and the dog fitting individually, mounting bolts (hexagon socket head cap screw) and spring washers will be attached as a standard.

⚠

When you attach a dog fitting, be sure to use a knuckle joint, M6 with tap (end bracket symbol IA or YA).
The dog fitting cannot be attached to the knuckle joint, M6 without tap (end bracket symbol I or Y).

Foot

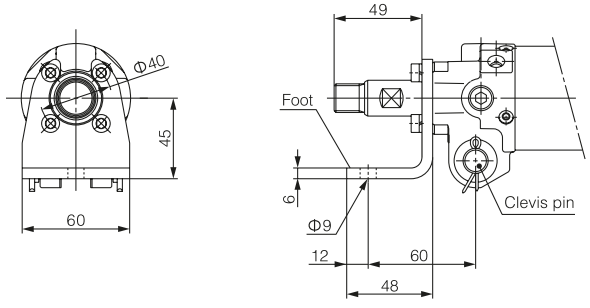

Material: Carbon steel

Part No.	Option symbol	Applicable clamp cylinder
NCK-L04	L	NCK□1A series NCK□1B series

Note: 1. A mounting bolt (hexagon socket head cap screw) and a spring washer will be attached as a standard for the foot bracket.
2. When mounting the cylinder, use both the foot and clevis pin. Please avoid using the foot by itself as this may result in damage.

Pedestal

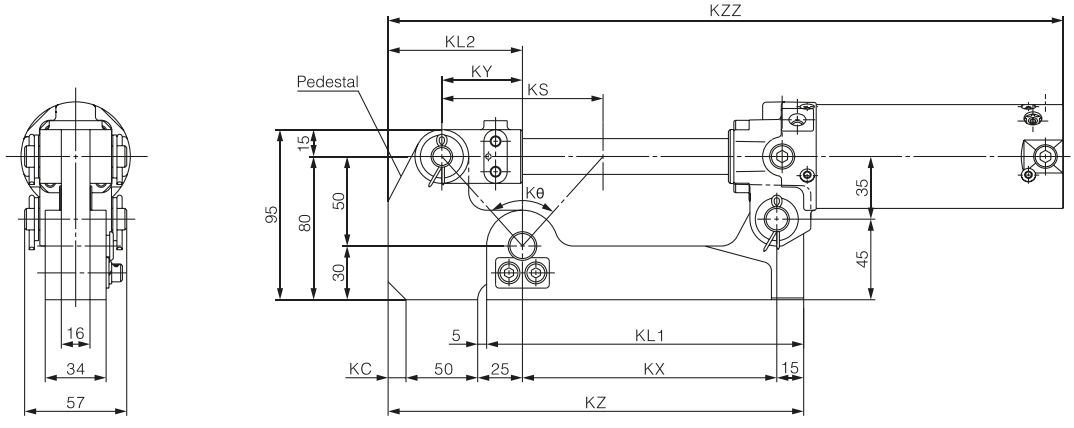

Material: Carbon steel

Part No.	Option symbol	KL1	KL2	KS	KX	KY	KZ	Kθ	KC	KZZ				Applicable clamp cylinder
										NCKG□40	NCKP□40	NCKG□50 NCKP□50	NCKG□63 NCKP□63	
NCKA-K075	K	167	75	70	132	35	222	69° 59'	0	360	365	360		NCK□1A40-75YZ NCK□1A50-75YZ NCK□1A63-75YZ
NCKA-K100		177	75	90	142	45	232	83° 58'	0	395				NCK□1A40-100YZ NCK□1A50-100YZ NCK□1A63-100YZ
NCKA-K150		202	85	140	167	70	267	108° 55'	10	480				NCK□1A40-150YZ NCK□1A50-150YZ NCK□1A63-150YZ

Note: Only available for the NCK□1A series (Clevis width 16.5 mm)