
## Specifications

| Bore size(mm) | 6 | 10 | 16 | 20 | 25 | 32 | 40 |
|---|---|---|---|---|---|---|---|
| Operation | Double acting | | | | | | |
| Fluid | Air | | | | | | |
| Pressure range (kgf/cm²(kpa)) | 1~8.5(100~850)bar | | | | | | |
| Max. service pressure (kgf/cm²(kpa)) | 9(900)bar | | | | | | |
| Operating ambient temperature range (°C) | 0~60 | | | | | | |
| Range of service speed (mm/sec) | 50~700 | | | | | | |
| Stroke adjusting range | -5~0 | | | | | | |
| Port size | M3×0.5p | M5×0.8p | | | | 1/8" | |
| Sensor device | With magnet | | | | | | |

Note: PT thread, G thread and NPT thread are available.

## Standard stroke

| Bore size (mm) | Standard stroke | Adjusting range |
|---|---|---|
| 6 | 10, 20, 30, 40, 50 | |
| 10 | 10, 20, 25, 30, 40, 50, 75, 100 | |
| 16 | 10, 20, 25, 30, 40, 50, 75, 100, 125, 150, 175, 200, 250 | |
| 20 | 10, 20, 25, 30, 40, 50, 75, 100, 125, 150, 175, 200, 250 | -5~0 |
| 25 | 10, 20, 25, 30, 40, 50, 75, 100, 125, 150, 175, 200, 250 | |
| 32 | 10, 20, 25, 30, 40, 50, 75, 100, 125, 150, 175, 200, 250 | |
| 40 | 10, 20, 30, 40, 50, 75, 100, 125, 150 | |

## Ordering code

**TD 10 × 50 – SD 2**

**Model**

| | |
|---|---|
| TD | Dual rod cylinder |

**Bore size**

| | |
|---|---|
| 6 | 6mm |
| 10 | 10mm |
| 16 | 16mm |
| 20 | 20mm |
| 25 | 25mm |
| 32 | 32mm |
| 40 | 40mm |

**Stroke**

| | |
|---|---|
| 6 | 10~50 mm |
| 10 | 10~100 mm |
| 16 | 10~250 mm |
| 20 | 10~250 mm |
| 25 | 10~250 mm |
| 32 | 10~250 mm |
| 40 | 10~150 mm |

**Sensor switch**

| | |
|---|---|
| Blank | Without sensor switch |
| SE | Sensor switch code(CS-30E) |
| SD | Sensor switch code (CS-9D) |
| SB | Sensor switch code (CS-9B) |

Note: Φ6, Φ40 are not suitable.

**Number of sensor switch**

| | |
|---|---|
| 1 | 1 pcs |
| 2 | 2 pcs |

## Theoretical force

| Bore size(mm) | Piston rod dia(mm) | Action | Piston area (cm²) | Air pressure (kgf/cm²) 1 | 2 | 3 | 4 | 5 | 6 | 7 |
|---|---|---|---|---|---|---|---|---|---|---|
| 6 | 4 | Push | 0.5 | - | 1.0 | 1.5 | 2.0 | 2.5 | 3.0 | 3.5 |
| | | Pull | 0.3 | - | 0.6 | 0.9 | 1.2 | 1.5 | 1.8 | 2.1 |
| 10 | 6 | Push | 1.5 | - | 3.1 | 4.7 | 6.2 | 7.8 | 9.3 | 10.9 |
| | | Pull | 1.0 | - | 2.0 | 3.0 | 4.0 | 5.0 | 6.0 | 7.0 |
| 16 | 8 | Push | 4.0 | 4.0 | 8.0 | 12.0 | 16.0 | 20.1 | 24.1 | 28.1 |
| | | Pull | 3.0 | 3.0 | 6.0 | 9.0 | 12.0 | 15.0 | 18.0 | 21.0 |
| 20 | 10 | Push | 6.2 | 6.2 | 12.5 | 18.8 | 25.1 | 31.4 | 37.6 | 43.9 |
| | | Pull | 4.7 | 4.7 | 9.4 | 14.1 | 18.8 | 23 5 | 28.2 | 32.9 |
| 25 | 12 | Push | 9.8 | 9.8 | 19.6 | 29.4 | 39.2 | 49.1 | 58.8 | 68.5 |
| | | Pull | 7.5 | 7.5 | 15.1 | 22.6 | 30.2 | 37.7 | 45.3 | 52.8 |
| 32 | 16 | Push | 16.0 | 16.0 | 32.1 | 48.2 | 64 3 | 80.4 | 96.4 | 112.5 |
| | | Pull | 12.0 | 12.1 | 24.1 | 36.2 | 48.2 | 60.3 | 72.4 | 84.4 |
| 40 | 20 | Push | 25.1 | 25.1 | 50.3 | 76.5 | 100.5 | 125.7 | 150.8 | 175.9 |
| | | Pull | 18.8 | 18.8 | 37.7 | 26.5 | 75.4 | 94.2 | 131.1 | 131.9 |

Note : Above are theoretical date ; please take into consideration the frictional resistance and the mechanical efficiency of value should be added calculation before using. ( About 70%~80%)

## Inner structure and material of major parts

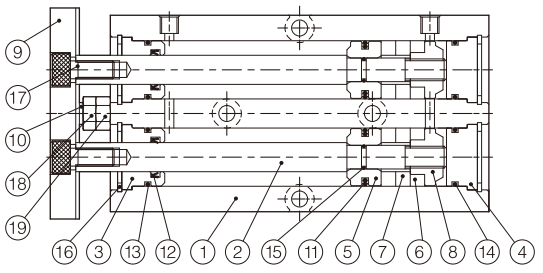


| No. | Item | Material | No. | Item | Material |
|---|---|---|---|---|---|
| 1 | Body | Aluminum alloy | 11 | Piston packing | NBR |
| 2 | Rod | Carbon steel(chrome plated) | 12 | Rod packing | NBR |
| 3 | Front cover | Aluminum alloy | 13 | Front cover O-Ring | NBR |
| 4 | End cover | Aluminum alloy | 14 | End cover O-Ring | NBR |
| 5 | Piston | Copper | 15 | Piston O-Ring | NBR |
| 6 | Wear ring | Teflon | 16 | Snap | Spring steel |
| 7 | Magnet | Rare earth metals/Plastic magnet | 17 | Screw | Alloy steel |
| 8 | Magnet | Copper | 18 | Screw | Alloy steel |
| 9 | Sliding block | Iron / Aluminum alloy | 19 | Nut | Medium carbon steel |
| 10 | Stopper | Rubber / Bearing steel | | | |

Note: TDΦ6, Φ10, Φ16, Φ20 Plate material is Iron; TD Φ25, Φ32, Φ40 Plate material is aluminum alloy.

## Packing and O-Ring list

| Item | Piston packing | Rod packing | End cover O-ring | Front cover O-ring | Piston O-ring |
|---|---|---|---|---|---|
| Bore size / No. | 2 | 2 | 2 | 2 | 2 |
| 6 | MYA-3(4 PCS) | EM0407 | 5×1.0 | 5×1.0 | - |
| 10 | DYP-10(4 PCS) | EM0609 | 8×1.0 | 8×1.0 | 2.9×1.0 |
| 16 | PSD-16 | EM0811 | 13.2×1.5 | 13.2×1.5 | 8×1.0 |
| 20 | COP-20 | EM1014 | 17.5×1.5 | 17.5×1.5 | 10×1.0 |
| 25 | COP-25 | EM1214 | 20.8×2.0 | 20.8×2.0 | 12×1.0 |
| 32 | COP-32 | EM1620 | 28.5×2.0 | 28.5×2.0 | 16×1.5 |
| 40 | COP-40 | EM2025 | 36×2.0 | 36×2.0 | 20×1.5 |

## Weight

| Bore size(mm) | Weight (kg) | | | | | | | | | | |
|---|---|---|---|---|---|---|---|---|---|---|---|
| | Stroke (mm) | | | | | | | | | | |
| | 10 | 20 | 30 | 40 | 50 | 75 | 100 | 125 | 150 | 175 | 200 |
| 6 | 0.1 | 0.1 | 0.1 | 0.1 | 0.1 | – | – | – | – | – | – |
| 10 | 0.10 | 0.11 | 0.13 | 0.14 | 0.15 | 0.19 | 0.22 | – | – | – | – |
| 16 | 0.31 | 0.34 | 0.36 | 0.39 | 0.42 | 0.49 | 0.56 | 0.62 | 0.69 | 0.76 | 0.83 |
| 20 | 0.46 | 0.49 | 0.53 | 0.56 | 0.60 | 0.69 | 0.78 | 0.87 | 0.96 | 1.04 | 1.13 |
| 25 | 0.77 | 0.81 | 0.87 | 0.92 | 0.97 | 1.09 | 1.15 | 1.34 | 1.46 | 1.61 | 1.76 |
| 32 | 1.51 | 1.56 | 1.68 | 1.78 | 1.87 | 2.08 | 2.32 | 2.55 | 2.77 | 3.00 | 3.25 |
| 40 | 2 | 2.2 | 2.4 | 2.7 | 2.9 | 3.1 | 3.4 | 3.6 | 3.8 | – | – |

## Allowable load

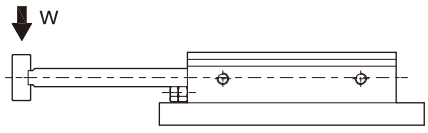


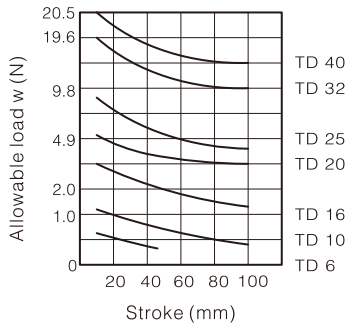


## Allowable deflection

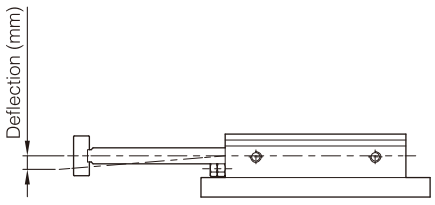


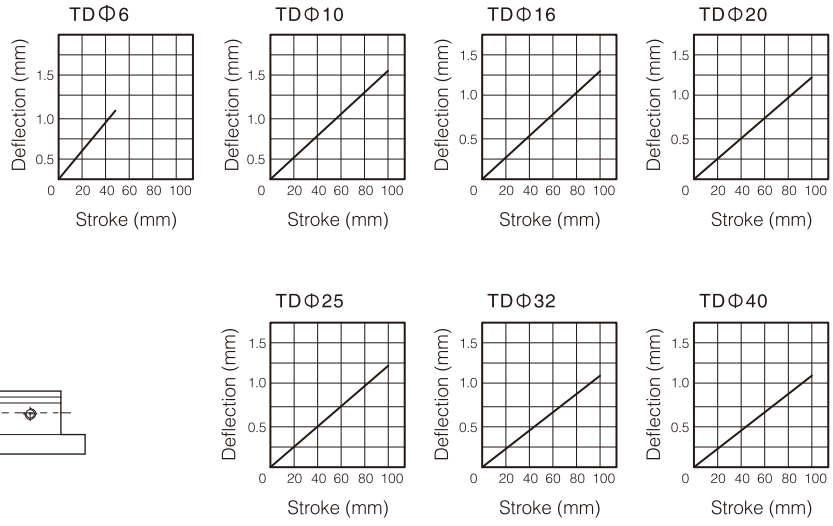


Cylinder
SC
SC(Big)
SCT
SCF
SU
SUF
SI
SIF
DNC
QGB
QGBZ
NCQ2
NCQ2(Big)
NCQ2(Long)
NCQS
NCQM
NRQ
SDA
ADVU
ACE(AND)
MAL
MA
MI
NCM2
NCJ2
NCG1
NCJP
TD
TN(TDA)
NCXS
NCXSW
NMGP
NMGG
NCU
NCUJ
NCY3B
NCY3R
NCY1S
NCY1L
STM
NMXH
NMXS
NMXQ
NMHZ2
NMHC2
NMHL2
NMHY2
NMHT2
NMHW2
NMHF2
NMHS2
NMHS3
NMHS4
NMRHQ
NMSQ
NCRA1
NCRQ2
NCRB2
ACK
SRC
QCK
NCK1

## Dimension for end rod

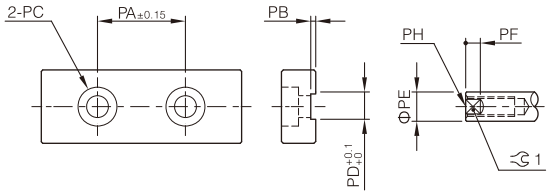


| Symbol / Bore size | PA | PB | PC | PD | PE | PF | 1 | PH |
|---|---|---|---|---|---|---|---|---|
| 6 | 13 | 1 | Thru-hole Φ2.8 , Hole Φ5 dp 2.7 | 3.5 | 4 | 2 | 3.5 | M2.5×0.4 dp 5 |
| 10 | 18 | 1 | Thru-hole Φ4.5 , Hole Φ8 dp 4.3 | 5.2 | 6 | 3 | 5.2 | M4×0.7 dp 10 |
| 16 | 24.2 | 1 | Thru-hole Φ5.5 , Hole Φ9 dp 5.5 | 6.2 | 8 | 3 | 6.2 | M5×0.8 dp 12 |
| 20 | 28.2 | 1 | Thru-hole Φ6.5 , Hole Φ11 dp 6.8 | 8.2 | 10 | 3 | 8.2 | M6×1.0 dp 15 |
| 25 | 34.2 | 1 | Thru-hole Φ8.5 , Hole Φ14 dp 8.5 | 10.2 | 12 | 3 | 10.2 | M8×1.25 dp 15 |
| 32 | 44 | 1 | Thru-hole Φ8.5 , Hole Φ17 dp 11 | 14 | 16 | 3 | 14 | M10×1.5 dp 20 |
| 40 | 55 | 2.5 | Thru-hole Φ10.5 , Hole Φ17 dp 11 | 18 | 20 | 4 | 18 | M10×1.5 dp 15 |

## Mounting type

Two types of mounting for body

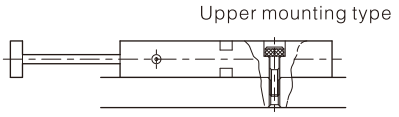


Mounting housing from three directions

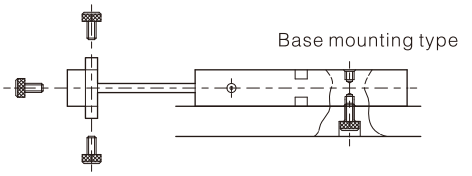


## Dimensions

**TD Φ6×□**

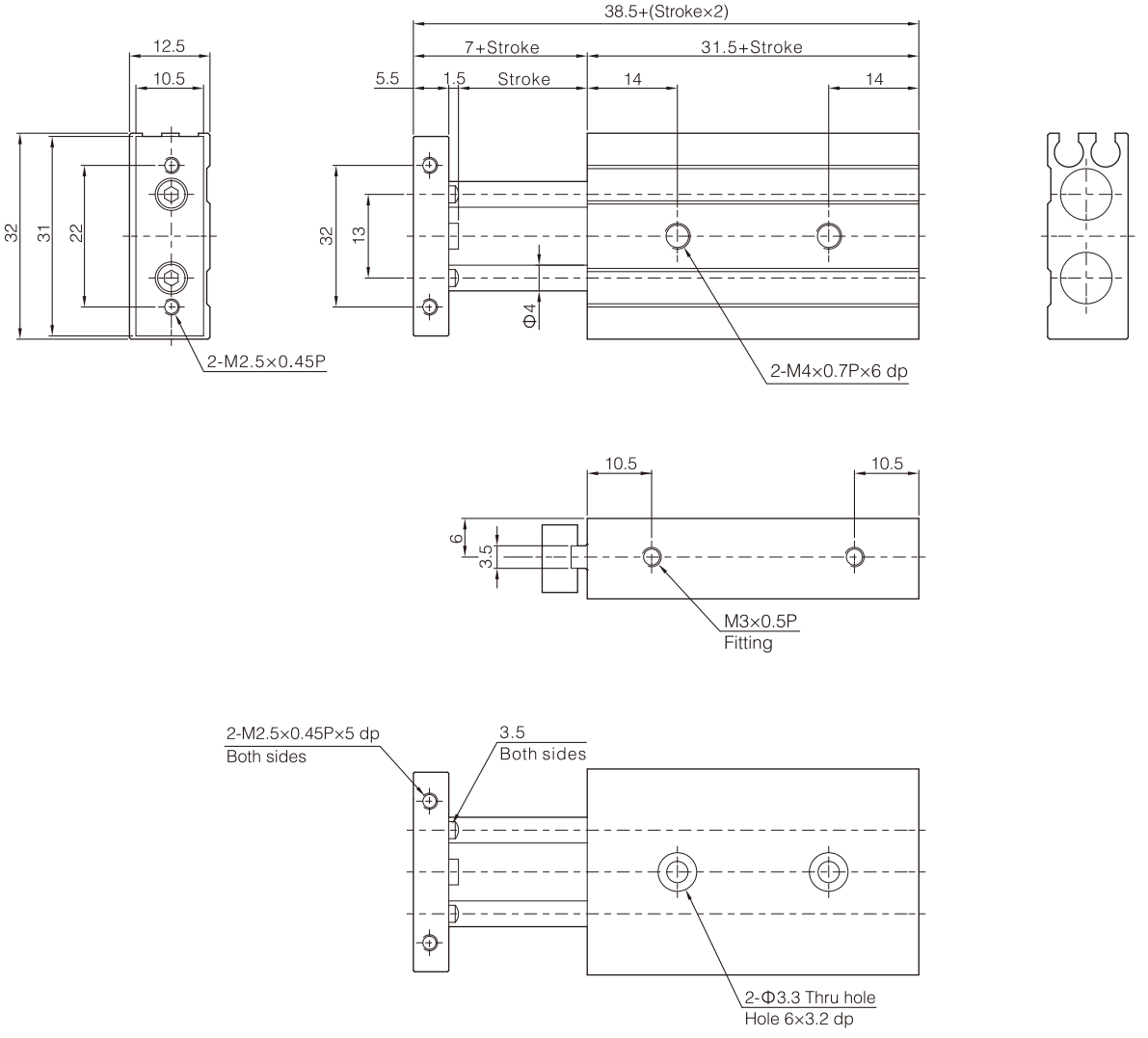

**TD Φ10×□**

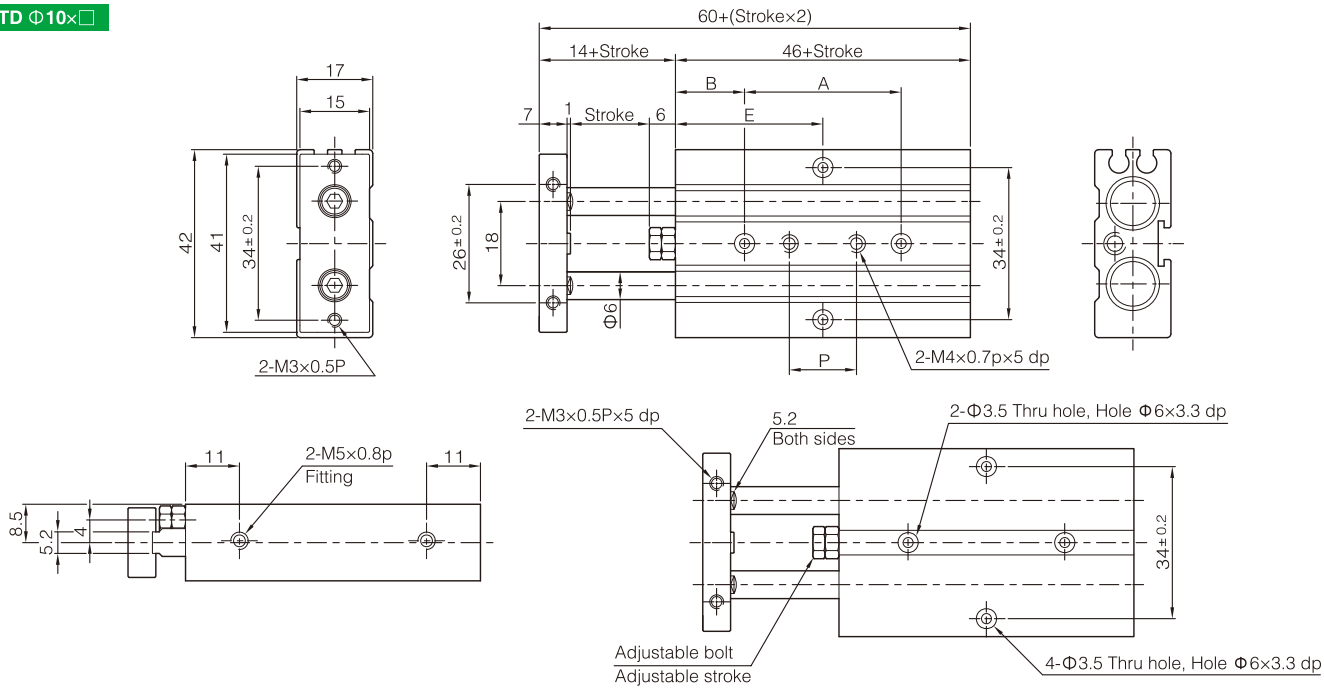


| Code \ Stroke | 10 | 20 | 25 | 30 | 40 | 50 | 75 | 100 |
|---|---|---|---|---|---|---|---|---|
| A | 20 | 30 | 35 | 40 | 50 | 60 | 85 | 110 |
| B | 18 | 18 | 18 | 18 | 18 | 18 | 18 | 18 |
| C | 28 | 33 | 35.5 | 38 | 43 | 43 | 60.5 | 73 |
| P | - | - | 15 | 20 | 30 | 30 | 65 | 90 |

**TD Φ16×□**

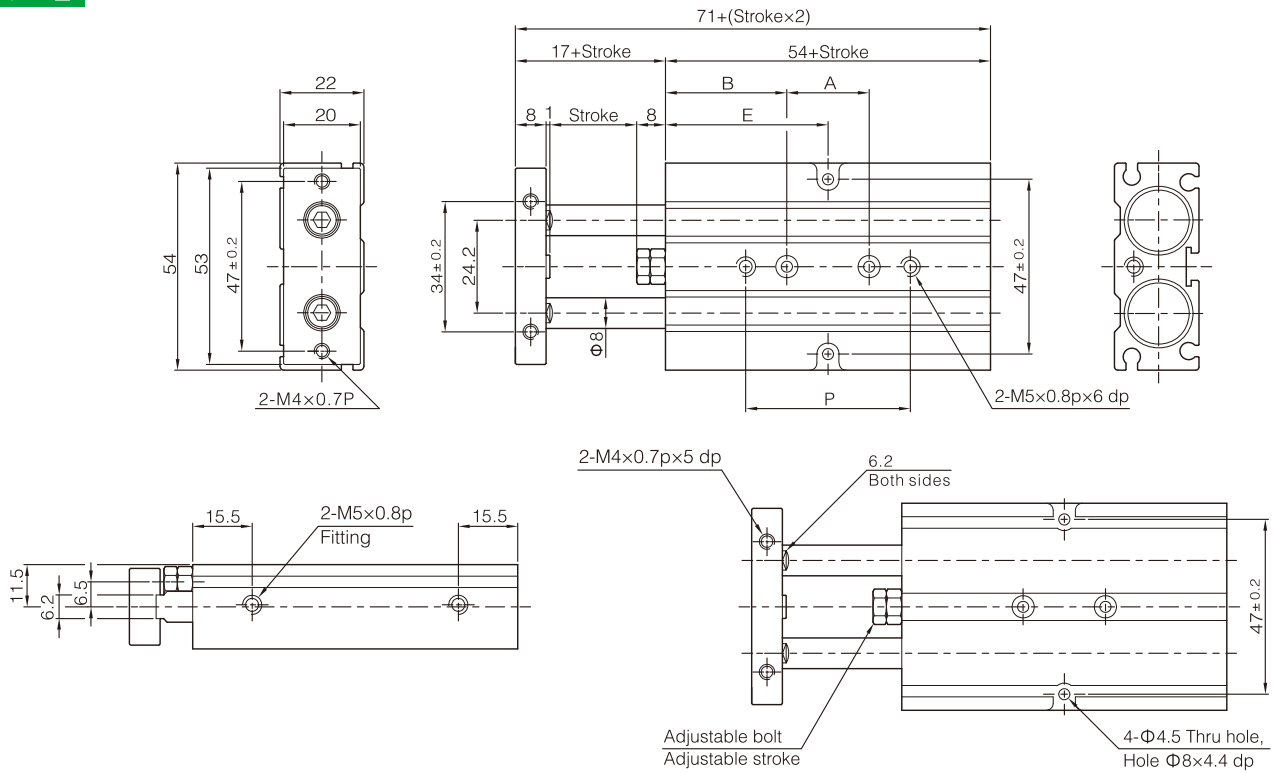


| Code \ Stroke | 10 | 20 | 25 | 30 | 40 | 50 | 75 | 100 | 125 | 150 | 175 | 200 | 250 |
|---|---|---|---|---|---|---|---|---|---|---|---|---|---|
| A | 20 | 20 | 20 | 20 | 30 | 40 | 60 | 80 | 100 | 100 | 100 | 100 | 120 |
| B | 22 | 27 | 29.5 | 32 | 32 | 32 | 34.5 | 37 | 39.5 | 52 | 64.5 | 77 | 92 |
| C | 32 | 37 | 39.5 | 42 | 47 | 52 | 64.5 | 77 | 89.5 | 102 | 114.5 | 127 | 152 |
| P | - | - | 40 | 40 | 50 | 60 | 80 | 100 | 120 | 120 | 120 | 120 | 150 |

## TD Φ20×□

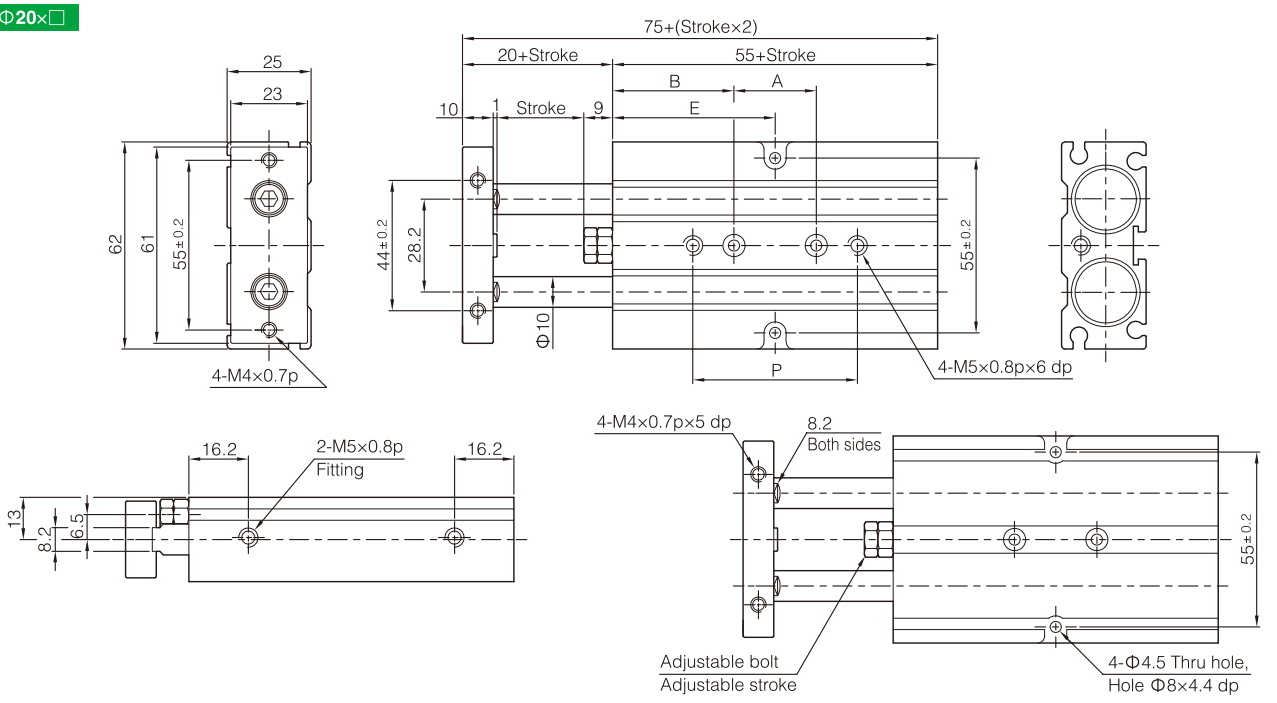


| Code \ Stroke | 10 | 20 | 25 | 30 | 40 | 50 | 75 | 100 | 125 | 150 | 175 | 200 | 250 |
|---|---|---|---|---|---|---|---|---|---|---|---|---|---|
| A | 20 | 20 | 20 | 20 | 30 | 40 | 60 | 80 | 100 | 100 | 100 | 100 | 120 |
| B | 22.5 | 27.5 | 30 | 32.5 | 32.5 | 32.5 | 35 | 37.5 | 40 | 52.5 | 65 | 77.5 | 92.5 |
| C | 32.5 | 37.5 | 40 | 42.5 | 47.5 | 52.5 | 65 | 77.5 | 90 | 102.5 | 115 | 127.5 | 152.5 |
| P | - | - | 40 | 40 | 50 | 60 | 80 | 100 | 120 | 120 | 120 | 120 | 150 |

## TD Φ25×□

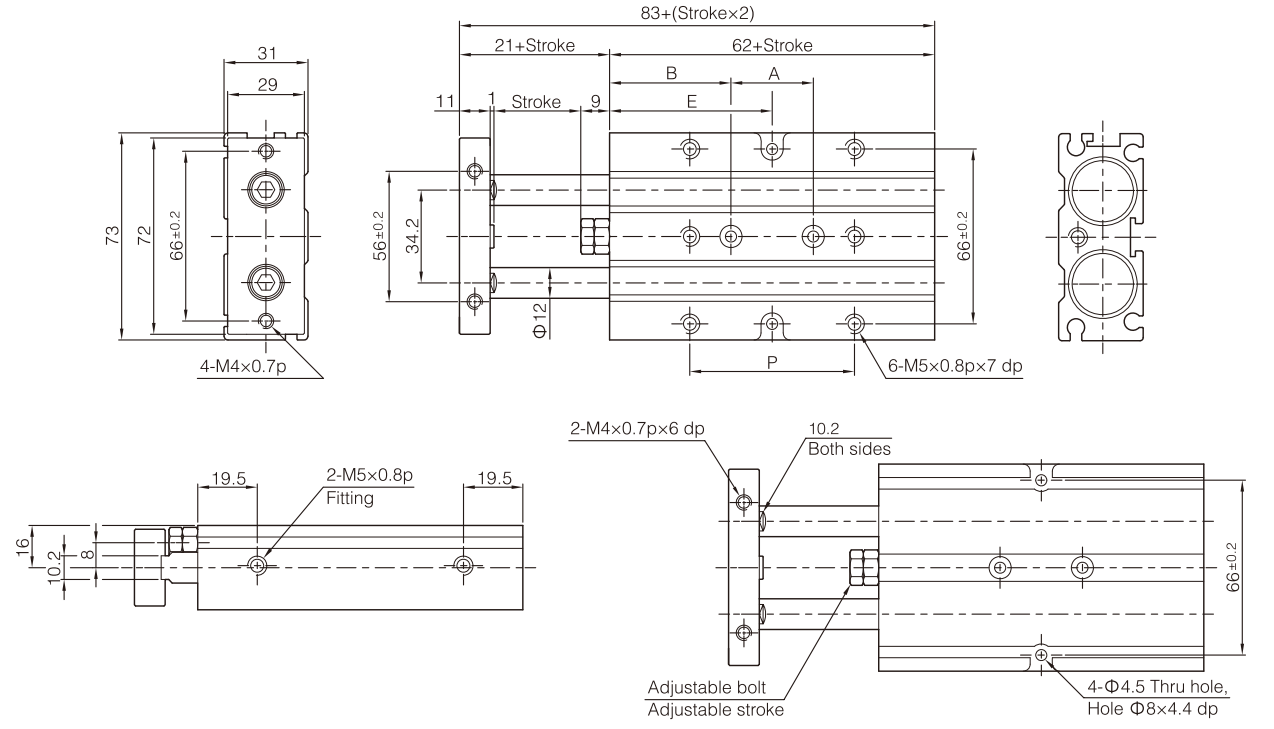


| Code \ Stroke | 10 | 20 | 25 | 30 | 40 | 50 | 75 | 100 | 125 | 150 | 175 | 200 | 250 |
|---|---|---|---|---|---|---|---|---|---|---|---|---|---|
| A | 20 | 20 | 20 | 20 | 30 | 40 | 60 | 80 | 100 | 100 | 100 | 100 | 120 |
| B | 26 | 31 | 33.5 | 36 | 36 | 36 | 38.5 | 41 | 43.5 | 56 | 68.5 | 81 | 96 |
| C | 36 | 41 | 43.5 | 46 | 51 | 56 | 68.5 | 81 | 93.5 | 106 | 118.5 | 131 | 156 |
| P | - | - | 40 | 40 | 50 | 60 | 80 | 100 | 120 | 120 | 120 | 120 | 150 |

**TD Φ32×□**

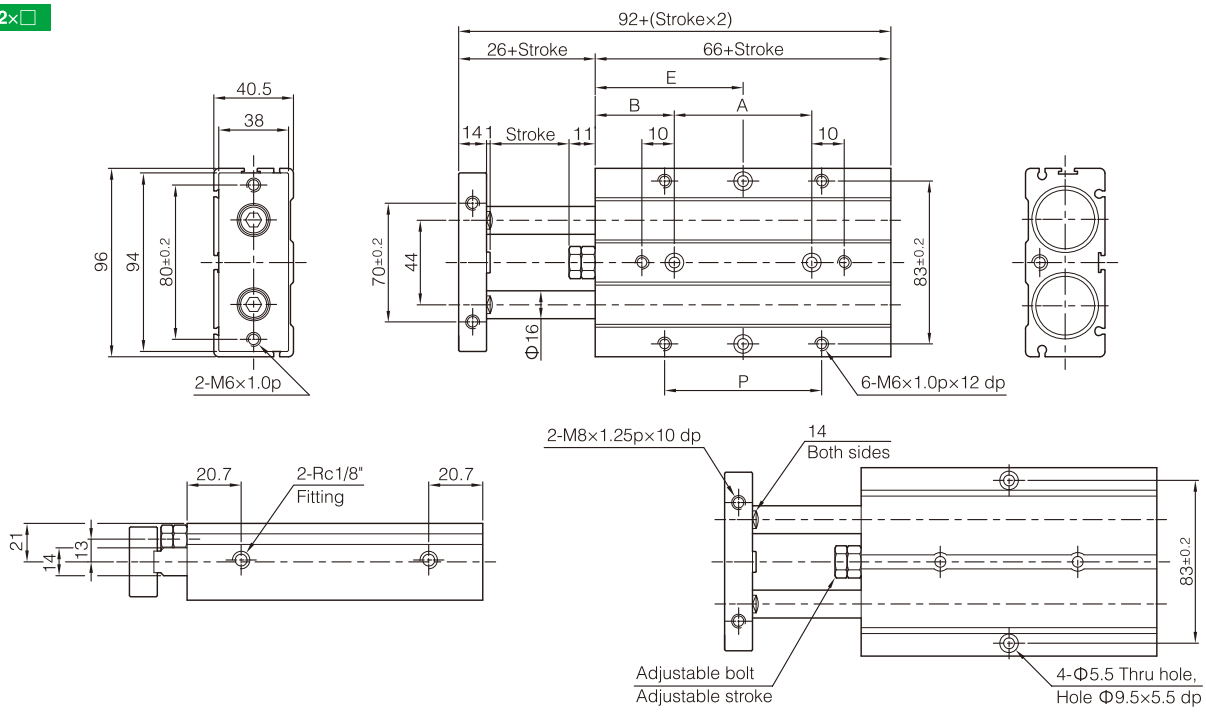


| Code \ Stroke | 10 | 20 | 25 | 30 | 40 | 50 | 75 | 100 | 125 | 150 | 175 | 200 | 250 |
|---|---|---|---|---|---|---|---|---|---|---|---|---|---|
| A | 20 | 20 | 20 | 20 | 30 | 40 | 60 | 80 | 100 | 100 | 100 | 100 | 150 |
| B | 28 | 33 | 35.5 | 38 | 38 | 38 | 40.5 | 43 | 45.5 | 58 | 70.5 | 83 | 83 |
| C | 38 | 43 | 45.5 | 48 | 53 | 58 | 70.5 | 83 | 95.5 | 108 | 120.5 | 133 | 158 |
| P | - | - | 30 | 30 | 40 | 50 | 80 | 100 | 120 | 120 | 120 | 120 | 150 |

**TD Φ40×□**

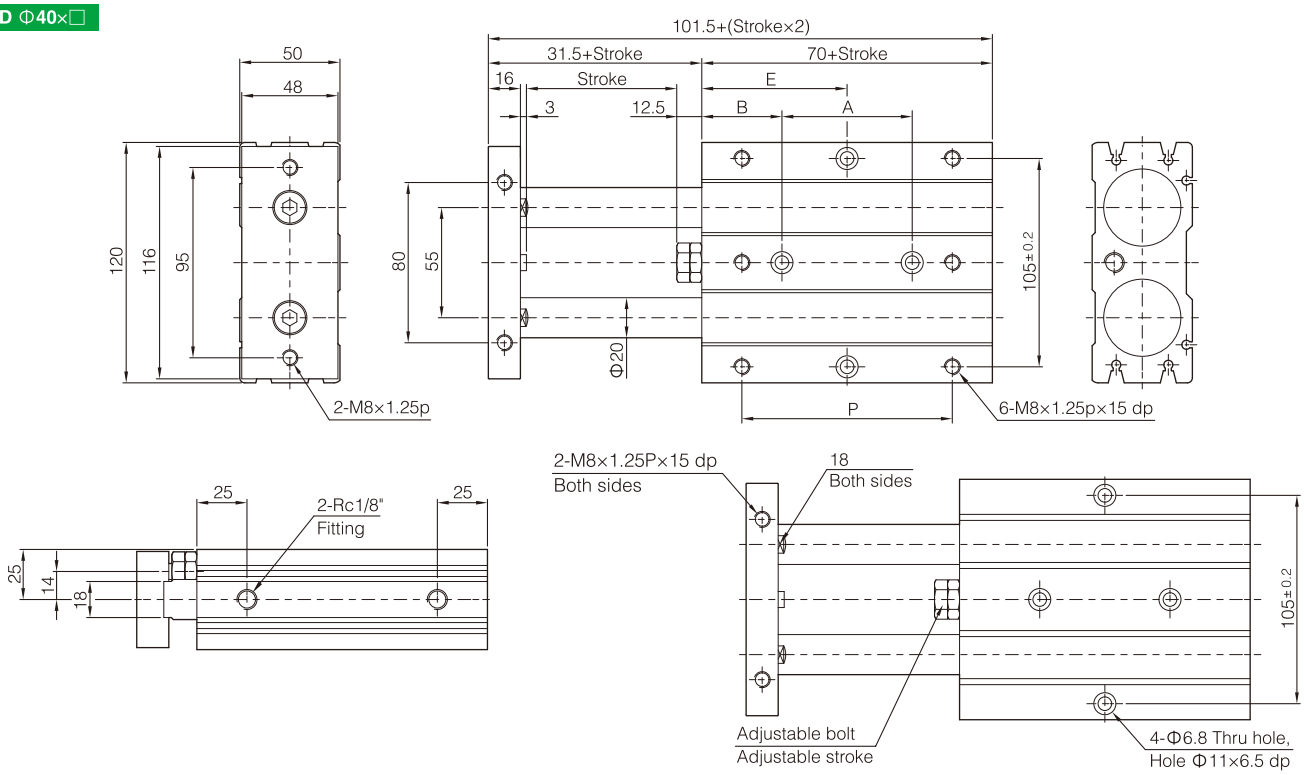


| Code \ Stroke | 10 | 20 | 30 | 40 | 50 | 75 | 100 | 125 | 150 |
|---|---|---|---|---|---|---|---|---|---|
| A | 45 | 55 | 35 | 40 | 40 | 65 | 65 | 90 | 110 |
| B | 17.5 | 17.5 | 32.5 | 35 | 40 | 40 | 52.5 | 52.5 | 55 |
| C | 40 | 45 | 50 | 55 | 60 | 72.5 | 85 | 97.5 | 110 |
| P | - | - | 65 | 70 | 80 | 105 | 105 | 130 | 150 |


## Specifications

| Bore size(mm) | 10 | 16 | 20 | 25 | 32 |
|---|---|---|---|---|---|
| Acting type | Double acting | | | | |
| Fluid | Air (to be filtered by 40μm filter element) | | | | |
| Operating pressure | 0.15~1.0MPa(22~145psi) | | | | |
| Proof pressure | 1.5MPa(215psi) | | | | |
| Temperature (℃) | -20~70 | | | | |
| Speed range (mm/s) | 30~500 | | | | |
| Adjustable stroke (mm) | -10~0 | | | | |
| Stroke tolerance | $\leqslant 100^{+1.0}_{0}$ $>100^{+1.5}_{0}$ | | | | |
| Cushion type | Bumper | | | | |
| Non-rotating tolerance Note 1) | ±0.4° | ±0.3° | | | |
| Port size Note 2) | M5×0.8 | | | | 1/8" |

Note 1: Retract position.
2: PT thread, G thread and NPT thread are available.

## Symbol

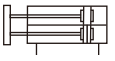

## Standard stroke

| Bore size (mm) | Standard stroke (mm) | Max.std strole |
|---|---|---|
| 10 | 10 20 30 40 50 60 70 80 90 100 | 100 |
| 16 | 10 20 30 40 50 60 70 80 90 100 125 150 175 200 | 200 |
| 20 | 10 20 30 40 50 60 70 80 90 100 125 150 175 200 | 200 |
| 25 | 10 20 30 40 50 60 70 80 90 100 125 150 175 200 | 200 |
| 32 | 10 20 30 40 50 60 70 80 90 100 125 150 175 200 | 200 |

Note: When the stroke less then or equal to 100mm, The dimensions of non-std stroke cylinder has the same dimensions as the next longer stroke std. cylinder. e.g. 35mm stroke cylinder has the same dimensions of 40 std. stroke cylinder.

## Product feature

1. Enterprises standard is implemented.
2. Embeded installation and fixation mode saves the installation space.
3. It is good resistance to bending and twisting moments.
4. Mounting holes on three sides facilitates multi-position mounting.
5. Bumper in front of the barrel can adjust the stroke of cylinder and relieve impact.
6. Standard configuration of this series has magnet and the type without magnet is not available.

## Ordering code

**TN** — **Model**

| | |
|---|---|
| TN | Twin-rod cylinder (Double acting type) |

**20** — **Bore size**

| | |
|---|---|
| 10 | 10mm |
| 16 | 16mm |
| 20 | 20mm |
| 25 | 25mm |
| 32 | 32mm |

× **50** — **Stroke**

Refer to stroke table for details

**S** — **Magnet** Note 1)

| | |
|---|---|
| S | With magnet |

□ — **Thread type** Note 2)

| | |
|---|---|
| Blank | PT |
| G | G |
| T | NPT |

Note: 1. TN Series are all with magnet.
2. When the thread is standard, the code is blank.

## Inner structure and material of major parts

**TN**

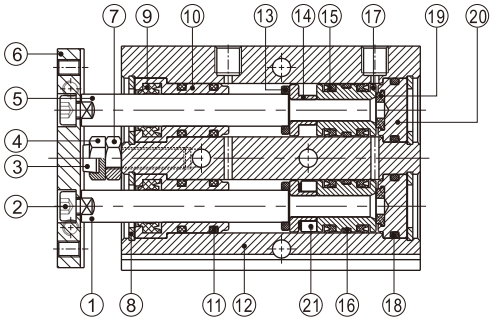


| NO. | Item | | Material | NO. | Item | | Material |
|---|---|---|---|---|---|---|---|
| 1 | Piston rod B | Φ32 | S45C | 12 | Body | | Aluminum alloy |
| | | Other | SUS304 | 13 | Bumper | | TPU |
| 2 | Screw | | Carbon steel | 14 | Magnet holder | Φ10 | SUS303 |
| 3 | Bumper | | POM | | | Other | Aluminum alloy |
| 4 | Adjustable nut | | Carbon steel | 15 | Piston seal | | NBR |
| 5 | Piston rod A | | S45C | 16 | Wear ring | | Wear resistant material |
| 6 | Fixing plate | | Free cutting steel | 17 | Piston | Φ10 | SUS303 |
| 7 | Screw | | Carbon steel | | | Other | Aluminum alloy |
| 8 | C clip | | Spring steel | 18 | Seal ring | | NBR |
| 9 | Wiper seal | | NBR | 19 | Bumper | | TPU |
| 10 | Front cover | | Aluminum alloy | 20 | Back cover | | Aluminum alloy |
| 11 | O-ring | | NBR | 21 | Magnet | | Sintered metal(Neodymium-iron-boron) |

## Dimensions

**TN10**

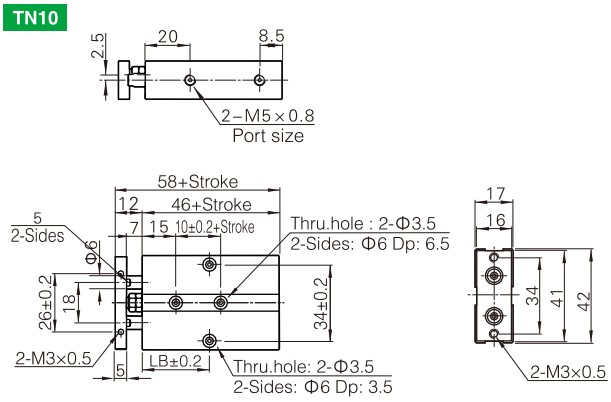


| Item\Stroke | 10 | 20 | 30 | 40 | 50 | 60 | 70 | 80 | 90 | 100 |
|---|---|---|---|---|---|---|---|---|---|---|
| LB | 30 | 30 | 35 | 40 | 45 | 50 | 55 | 60 | 65 | 70 |

**TN32**

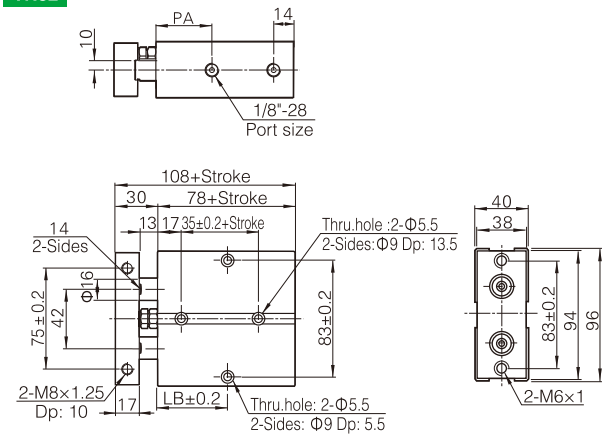


| Item\Stroke | 10 | 20 | 30 | 40 | 50 | 60 | 70 | 80 | 90 | 100 | 125 | 150 | 175 | 200 |
|---|---|---|---|---|---|---|---|---|---|---|---|---|---|---|
| LB | 45 | 50 | 55 | 60 | 65 | 70 | 75 | 80 | 85 | 90 | 102.5 | 115 | 127.5 | 140 |
| PA | 35 | 40 | | | | | | | | | | | | |

**TN16~25**

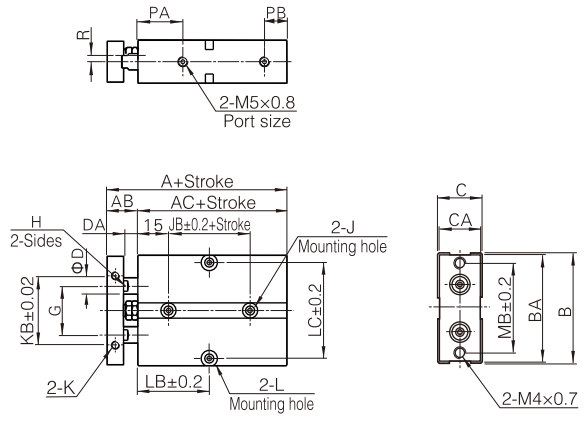


| Bore size\Item | A | AB | AC | B | BA | C | CA | D | DA | G | H | J |
|---|---|---|---|---|---|---|---|---|---|---|---|---|
| 16 | 68 | 15 | 53 | 54 | 53 | 21 | 20 | 8 | 7 | 24 | 6 | Both sides:Φ7.5Dp:7.5Thru.hole:Φ4.5 |
| 20 | 78 | 20 | 58 | 62 | 61 | 25 | 24 | 10 | 10 | 28 | 8 | Both sides:Φ7.5Dp:7.5Thru.hole:Φ4.5 |
| 25 | 81 | 19 | 62 | 73 | 72 | 30 | 29 | 12 | 9 | 34 | 10 | Both sides:Φ7.5Dp:7.5Thru.hole:Φ4.5 |

| Bore size\Item | JB | K | KB | PA | PB | L | LC | MB | R |
|---|---|---|---|---|---|---|---|---|---|
| 16 | 20 | M4×0.7Dp:5 | 34 | 22 | 11 | Both sides:Φ8Dp:4.5Thru.hole:Φ4.5 | 47 | 47 | 3 |
| 20 | 20 | M4×0.7Dp:5 | 44 | 25 | 12 | Both sides:Φ8Dp:4.5Thru.hole:Φ4.5 | 55 | 55 | 3.5 |
| 25 | 30 | M4×0.7Dp:6 | 56 | 27 | 12 | Both sides:Φ8Dp:4.5Thru.hole:Φ4.5 | 66 | 66 | 6 |

| Bore size\Item | LB | | | | | | | | | | | | | |
|---|---|---|---|---|---|---|---|---|---|---|---|---|---|---|
| Stroke≤ | 10 | 20 | 30 | 40 | 50 | 60 | 70 | 80 | 90 | 100 | 125 | 150 | 175 | 200 |
| 16 | 30 | 35 | 40 | 45 | 50 | 55 | 60 | 65 | 70 | 75 | 87.5 | 100 | 112.5 | 125 |
| 20 | 35 | 35 | 40 | 45 | 50 | 55 | 60 | 65 | 70 | 75 | 87.5 | 100 | 112.5 | 125 |
| 25 | 40 | 40 | 45 | 50 | 55 | 60 | 65 | 70 | 75 | 80 | 92.5 | 105 | 117.5 | 130 |

## Installation and application

1. How to mount workpiece

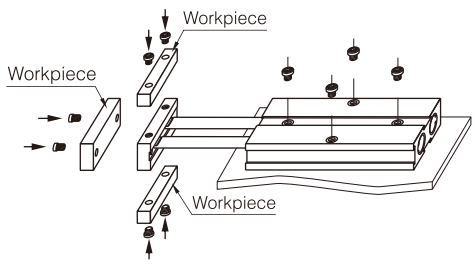


2. Max. weight of allowable side-load

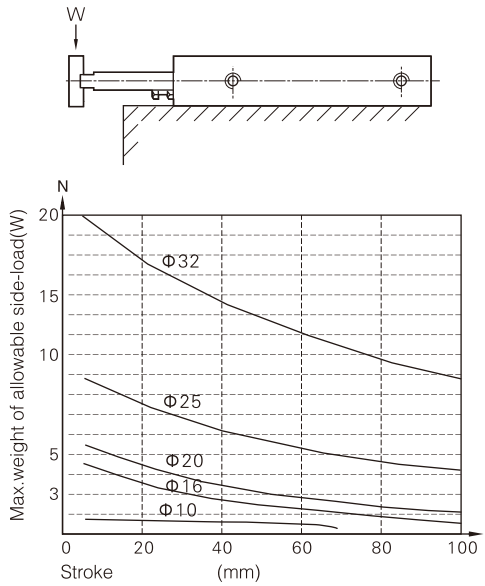

Thin double cylinder structure, high non-rotating accuracy and double output force, strong resistance to side load.

## Specifications

| Bore size(mm) | | 6 | 10 | 15 | 20 | 25 | 32 |
|---|---|---|---|---|---|---|---|
| Fluid | | Air (to be filtered by 40μm filter element) | | | | | |
| Action type | | Double acting | | | | | |
| Maximum operating pressure | | 0.7MPa | | | | | |
| Minimum operating pressure | | 0.15MPa | 0.1MPa | | 0.05MPa | | |
| Ambient and fluid temperature | | -10 to 60℃ (No freezing) | | | | | |
| Cushion | | Rubber bumper | | | | | |
| Piston speed (mm/s) | | 30~300 | 30~800 | 30~700 | | 30~600 | |
| Structure | | Double cylinder (Double output force) | | | | | |
| Lubrication Note 1) | | Non-lube | | | | | |
| Stroke adjustable range | | Retraction stroke 0~-5mm | | | | | |
| Bearing type | | Slide bearing/Ball bushing bearing | | | | | |
| Accuracy of piston rod non rotation | Slide bearing | ±0.1° | | | | | |
| | Ball bushing bearing | ±0.1° | | | | | |
| Port size | | M5×0.8 | | | | 1/8" | |

Note: If lubrication is required, please use turbine No.1 oil ISO VG32.

## Ordering code

**N C X S M 20 – 100 Z73 □**

**Bearing type**

| | |
|---|---|
| M | Slide bearing |
| L | Ball bushing bearing |

**Bore size**

| | |
|---|---|
| 6 | 6mm |
| 10 | 10mm |
| 15 | 15mm |
| 20 | 20mm |
| 25 | 25mm |
| 32 | 32mm |

**Stroke**

Refer to stroke table for details

**Magnetic switch type**

| | |
|---|---|
| Blank | Without magnetic switch |

* Magnetic switch type refer to stroke/Magnetic switch model table

**Number of magnetic switches**

| | |
|---|---|
| Blank | 2 pcs. |
| S | 1 pc. |
| n | "n" pcs. |

## Stroke/magnetic switch model table

| Bore size (mm) | Standard stroke | Magnetic switch model (Rail installation) |
|---|---|---|
| 6 | 10, 20, 30, 40, 50 | Z73 |
| 10 | 10, 15, 20, 25, 30, 35 40, 45, 50, 60, 70, 75 | |
| 15 | 10, 15, 20, 25, 30, 35, 40, 45, 50, 60, 70, 75, 80, 90, 100 | |
| 20 | | |
| 25 | | |
| 32 | | |

* The specifications and characteristics of magnetic switches can refer to the series of magnetic switches.
Wire length representation mark: no mark-0.5m, L-3m, Z-5m, Example: Z73, Z73L.

Cylinder body can be fixed in four directions by screw and the position of air supply port can be selected.

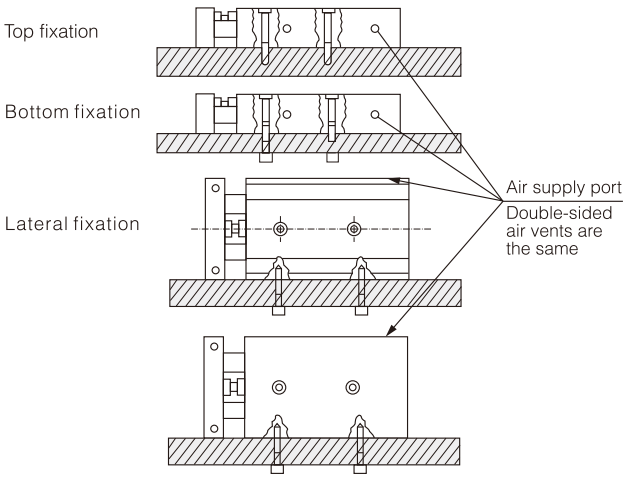


Workpiece can be installed on three planes of end plate

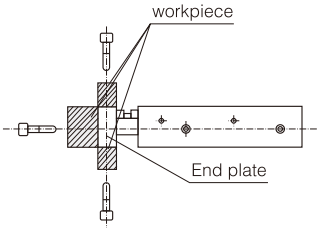


## Maximum allowable load

The maximum allowable load on the cylinder in the installation form shown in the figure below is lower than that listed in the figure above.

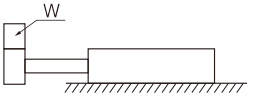


**Suitable for bore size Φ6**

(N)

| Model | Stroke (mm) | | | | |
|---|---|---|---|---|---|
| | 10 | 20 | 30 | 40 | 50 |
| NCXSM6 | 0.80 | 0.66 | 0.54 | 0.46 | 0.40 |
| NCXSL6 | 1.08 | 0.88 | 0.69 | 0.59 | 0.49 |

**Suitable for bore size Φ10~32**

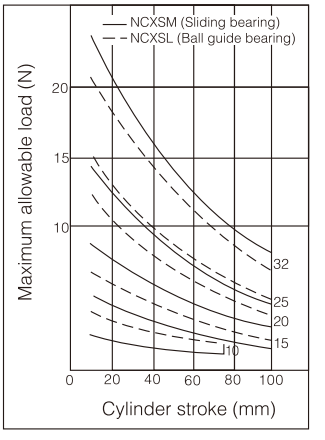

## Dimensions

**NCXS□6**

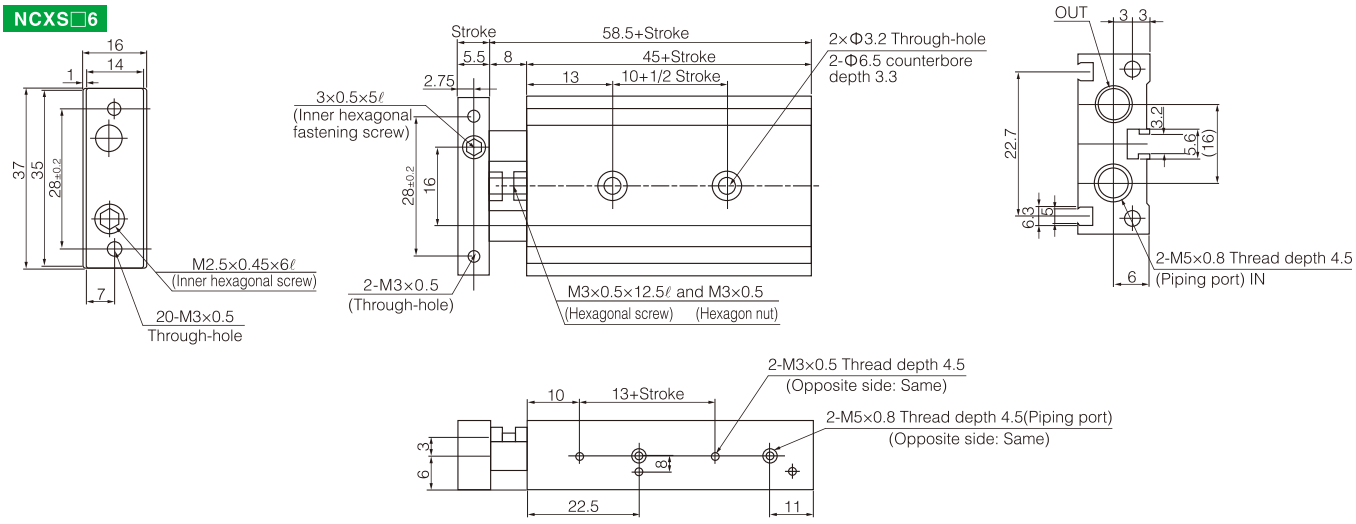


| Model | Stroke | 10+1/2 Stroke | 13+Stroke | 45+Stroke | 58.5+Stroke |
|---|---|---|---|---|---|
| NCXS□6-10 | 10 | 15 | 23 | 55 | 68.5 |
| NCXS□6-20 | 20 | 20 | 33 | 65 | 78.5 |
| NCXS□6-30 | 30 | 25 | 43 | 75 | 88.5 |
| NCXS□6-40 | 40 | 30 | 53 | 85 | 98.5 |
| NCXS□6-50 | 50 | 35 | 63 | 95 | 108.5 |

**NCXS□10 · 15 · 20 · 25 · 32**

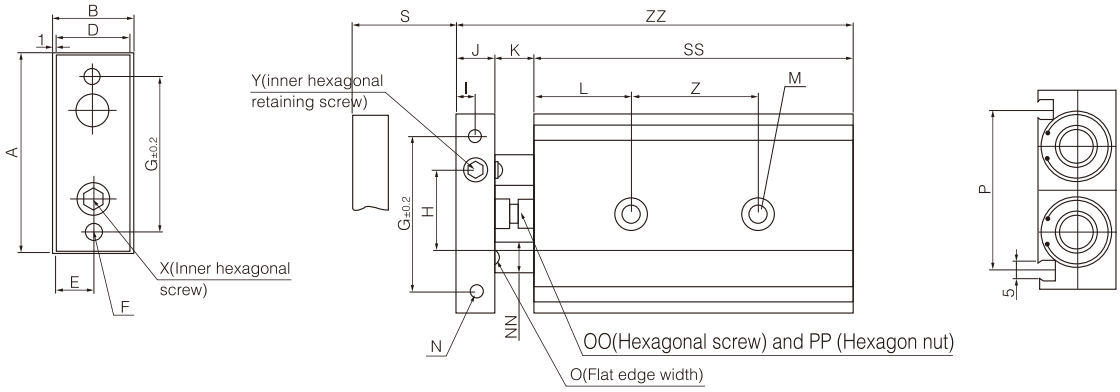


**Φ10-15**

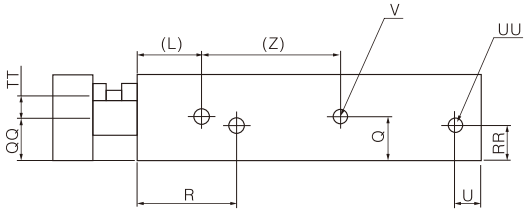


**Φ20-32**

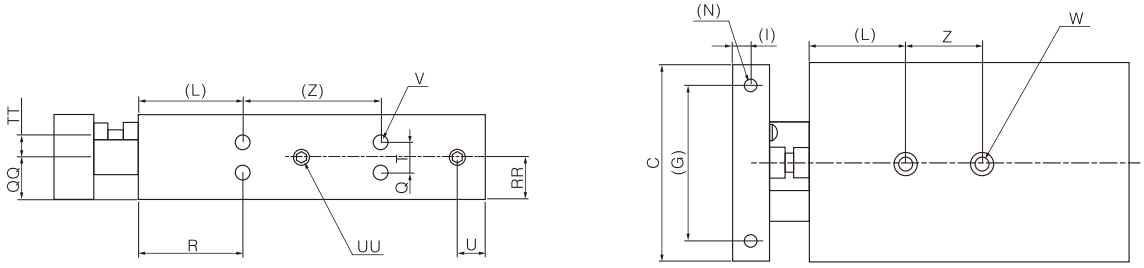

| Model | A | B | C | D | E | F | G | H | I | J | K | L | M | N | NN | O | OO |
|---|---|---|---|---|---|---|---|---|---|---|---|---|---|---|---|---|---|
| NCXS□10-10 | 46 | 17 | 44 | 15 | 7.5 | 2-M4×0.7 (Through-hole) | 35 | 20 | 4 | 8 | 9 | 20 | 2-Φ3.4 Through-hole 2-Φ6.5 Counterbore depth 3.3 | 2-M3×0.5 Thread depth 5 | Φ6 | 5 | M4×0.7 ×14.5 L |
| NCXS□10-20 | | | | | | | | | | | | | | | | | |
| NCXS□10-30 | | | | | | | | | | | | | | | | | |
| NCXS□10-40 | | | | | | | | | | | | | | | | | |
| NCXS□10-50 | | | | | | | | | | | | | | | | | |
| NCXS□15-10 | 58 | 20 | 56 | 18 | 9 | 2-M5×0.8 (Through-hole) | 45 | 25 | 5 | 10 | 9 | 30 | 2-Φ4.3 Through-hole 2-Φ8 Counterbore depth 4.4 | 2-M4×0.7 Thread depth 6 | Φ8 | 6 | M4×0.7 ×14.5 L |
| NCXS□15-20 | | | | | | | | | | | | | | | | | |
| NCXS□15-30 | | | | | | | | | | | | | | | | | |
| NCXS□15-40 | | | | | | | | | | | | | | | | | |
| NCXS□15-50 | | | | | | | | | | | | | | | | | |
| NCXS□20-10 | 64 | 25 | 62 | 23 | 11.5 | 2-M5×0.8 (Through-hole) | 50 | 28 | 6 | 12 | 12 | 30 | 2-Φ5.5 Through-hole 2-Φ9.5 Counterbore depth 5.3 | 2-M4×0.7 Thread depth 6 | Φ10 | 8 | M6×1.0 ×18.5 L |
| NCXS□20-20 | | | | | | | | | | | | | | | | | |
| NCXS□20-30 | | | | | | | | | | | | | | | | | |
| NCXS□20-40 | | | | | | | | | | | | | | | | | |
| NCXS□20-50 | | | | | | | | | | | | | | | | | |
| NCXS□20-75 | | | | | | | | | | | | | | | | | |
| NCXS□20-100 | | | | | | | | | | | | | | | | | |
| NCXS□25-10 | 80 | 30 | 78 | 28 | 14 | 2-M6×1.0 (Through-hole) | 60 | 35 | 6 | 12 | 12 | 30 | 2-Φ6.9 Through-hole 2-Φ11 Counterbore depth 6.3 | 2-M5×0.8 Thread depth 7.5 | Φ12 | 10 | M6×1.0 ×18.5 L |
| NCXS□25-20 | | | | | | | | | | | | | | | | | |
| NCXS□25-30 | | | | | | | | | | | | | | | | | |
| NCXS□25-40 | | | | | | | | | | | | | | | | | |
| NCXS□25-50 | | | | | | | | | | | | | | | | | |
| NCXS□25-75 | | | | | | | | | | | | | | | | | |
| NCXS□25-100 | | | | | | | | | | | | | | | | | |
| NCXS□32-10 | 98 | 38 | 96 | 36 | 18 | 2-M6×1.0 (Through-hole) | 75 | 44 | 8 | 16 | 14 | 30 | 2-Φ6.9 Through-hole 2-Φ11 Counterbore depth 6.3 | 2-M5×0.8 Thread depth 8 | Φ16 | 13 | M8 ×1.25 ×23 L |
| NCXS□32-20 | | | | | | | | | | | | | | | | | |
| NCXS□32-30 | | | | | | | | | | | | | | | | | |
| NCXS□32-40 | | | | | | | | | | | | | | | | | |
| NCXS□32-50 | | | | | | | | | | | | | | | | | |
| NCXS□32-75 | | | | | | | | | | | | | | | | | |
| NCXS□32-100 | | | | | | | | | | | | | | | | | |

| Model | P | PP | Q | QQ | R | RR | S | SS | T | TT | U | UU | V | W | X | Y | Z | ZZ |
|---|---|---|---|---|---|---|---|---|---|---|---|---|---|---|---|---|---|---|
| NCXS□10-10 | 33.6 | M4 × 0.7 | 8.5 | 7 | 30 | 7 | 10 | 65 | - | 5 | 8 | 2-M5×0.5 Thread depth 4.5 (Piping port) (Opposite side same) | 4-M3×0.5 Thread depth 4.5 (Opposite side same) | 2-M4×0.7 Thread depth 7 | M3×0.5 ×10 L | M3×0.5 ×5 L | 30 | 82 |
| NCXS□10-20 | | | | | | | 20 | 75 | | | | | | | | | | 92 |
| NCXS□10-30 | | | | | | | 30 | 85 | | | | | | | | | 40 | 102 |
| NCXS□10-40 | | | | | | | 40 | 95 | | | | | | | | | | 112 |
| NCXS□10-50 | | | | | | | 50 | 105 | | | | | | | | | | 122 |
| NCXS□15-10 | 48 | M4 × 0.7 | 10 | 10 | 38.5 | 10 | 10 | 70 | - | 5 | 8 | 2-M5×0.8 Thread depth 4.5 (Piping port) (Opposite side same) | 4-M4×0.7 Thread depth 5 (Opposite side same) | 2-M5×0.8 Thread depth 8 | M5×0.8 ×10 L | M4×0.7 ×4 L | 25 | 89 |
| NCXS□15-20 | | | | | | | 20 | 80 | | | | | | | | | | 99 |
| NCXS□15-30 | | | | | | | 30 | 90 | | | | | | | | | 35 | 109 |
| NCXS□15-40 | | | | | | | 40 | 100 | | | | | | | | | | 119 |
| NCXS□15-50 | | | | | | | 50 | 110 | | | | | | | | | | 129 |
| NCXS□20-10 | 53 | M6 × 1.0 | 7.75 | 12.5 | 45 | 7.75 | 10 | 80 | 9.5 | 6.5 | 8 | 2-M5×0.8 Thread depth 4.5 (Piping port) (Opposite side same) | 8-M4×0.7 Thread depth 6 (Opposite side same) | 2-M6×1.0 Thread depth 10 | M6×1.0 ×12 L | M5×0.8 ×5 L | 30 | 104 |
| NCXS□20-20 | | | | | | | 20 | 90 | | | | | | | | | | 114 |
| NCXS□20-30 | | | | | | | 30 | 100 | | | | | | | | | 40 | 124 |
| NCXS□20-40 | | | | | | | 40 | 110 | | | | | | | | | | 134 |
| NCXS□20-50 | | | | | | | 50 | 120 | | | | | | | | | | 144 |
| NCXS□20-75 | | | | | | | 75 | 145 | | | | | | | | | 60 | 169 |
| NCXS□20-100 | | | | | | | 100 | 170 | | | | | | | | | | 194 |
| NCXS□25-10 | 64 | M6 × 1.0 | 8.5 | 15 | 46 | 15 | 10 | 82 | 13 | 9 | 9 | 4-1/8×0.8 Thread depth 6.5 (Piping port) (Opposite side same) | 8-M8×0.8 Thread depth 7.5 (Opposite side same) | 2-M8×1.25 Thread depth 12 | M6×1.0 ×14 L | M6×1.0 ×5 L | 30 | 106 |
| NCXS□25-20 | | | | | | | 20 | 92 | | | | | | | | | | 116 |
| NCXS□25-30 | | | | | | | 30 | 102 | | | | | | | | | 40 | 126 |
| NCXS□25-40 | | | | | | | 40 | 112 | | | | | | | | | | 136 |
| NCXS□25-50 | | | | | | | 50 | 122 | | | | | | | | | | 146 |
| NCXS□25-75 | | | | | | | 75 | 147 | | | | | | | | | 60 | 171 |
| NCXS□25-100 | | | | | | | 100 | 172 | | | | | | | | | | 196 |
| NCXS□32-10 | 76 | M8 × 1.25 | 9 | 19 | 56 | 19 | 10 | 92 | 20 | 11.5 | 10 | 4-1/8×0.8 Thread depth 6.5 (Piping port) (Opposite side same) | 8-M5×0.8 Thread depth 7.5 (Opposite side same) | 2-M8×1.25 Thread depth 12 | M8 ×1.25 ×16 L | M8 ×1.25 ×8 L | 40 | 122 |
| NCXS□32-20 | | | | | | | 20 | 102 | | | | | | | | | | 132 |
| NCXS□32-30 | | | | | | | 30 | 112 | | | | | | | | | 50 | 142 |
| NCXS□32-40 | | | | | | | 40 | 122 | | | | | | | | | | 152 |
| NCXS□32-50 | | | | | | | 50 | 132 | | | | | | | | | | 162 |
| NCXS□32-75 | | | | | | | 75 | 157 | | | | | | | | | 70 | 187 |
| NCXS□32-100 | | | | | | | 100 | 182 | | | | | | | | | | 212 |

## Specifications

| Bore size(mm) | 20 | 25 | 32 |
|---|---|---|---|
| Fluid | Air (to be filtered by 40μm filter element) | | |
| Proof pressure | 1.05MPa | | |
| Maximum operating pressure | 0.7MPa | | |
| Minimum operating pressure | 0.1MPa | | |
| Ambient and fluid temperature | -10 to 60°C (No freezing) | | |
| Piston speed (mm/s) | 50~1000 | | |
| Port size | M5×0.8 | Rc1/8 (NPT1/8, G1/8) | |
| Bearing type | Slide bearing, Ball bushing bearing (Same dimensions for both) | | |
| Cushion | Air cushion (Both ends) | | |

## Ordering code

**N C X S M 20 □ – 100 A Z73 □**

**Bearing type**

| | |
|---|---|
| M | Slide bearing |
| L | Ball bushing bearing |

**Bore size**

| | |
|---|---|
| 20 | 20mm |
| 25 | 25mm |
| 32 | 32mm |

**Thread type**

| Symbol | Type | Bore size |
|---|---|---|
| Blank | M thread | Φ20 |
| | Rc | Φ25, Φ32 |
| TN | NPT | |
| TF | G | |

**Stroke**

| Bore size | Stroke |
|---|---|
| Φ20 | 20, 25, 30, 35, 40, 45, 50, 60, 70, 75, 80, 90, 100 |
| Φ25,Φ32 | 25, 30, 35, 40, 45, 50, 60, 70, 75, 80, 90, 100 |

**Bilateral air cushion**

**Magnetic switch type**

| | |
|---|---|
| Blank | Without magnetic switch |
| Z73 | With magnetic switch |

* Behind the magnetic switch type, Wire length representation mark: no mark-0.5m, L-3m, Z-5m.

**Number of magnetic switches**

| | |
|---|---|
| Blank | 2 pcs. |
| S | 1 pc. |
| n | "n" pcs. |

## Dimensions

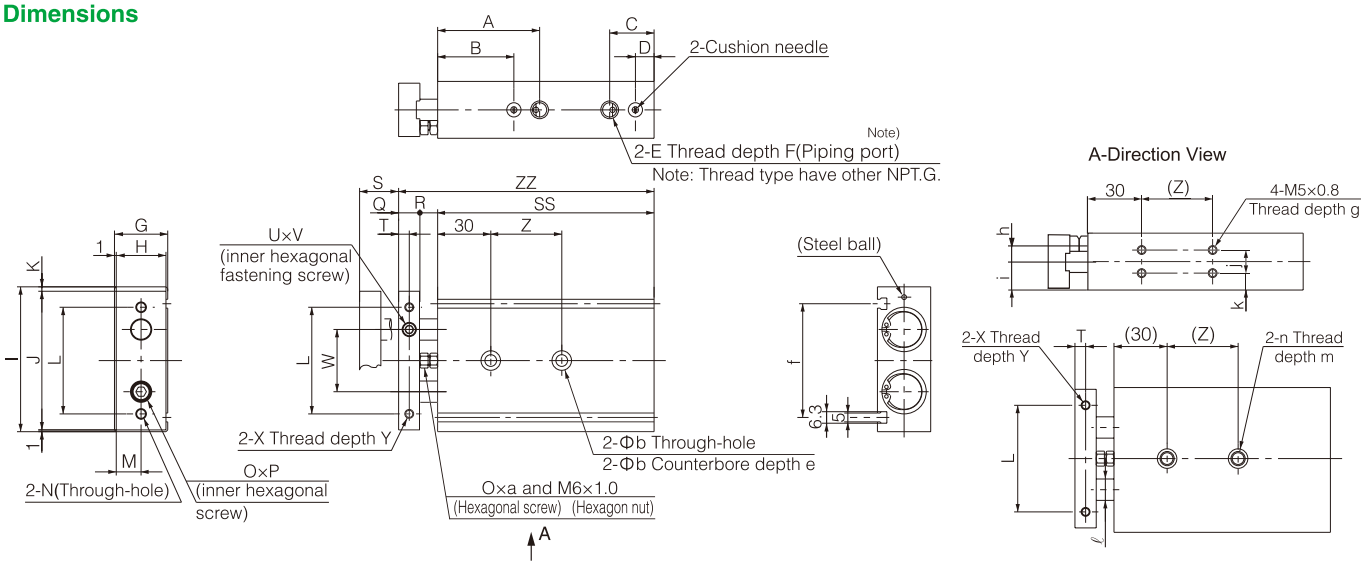


| Bore size | A | B | C | D | E | F | G | H | I | J | K | L | M | N | O | P | Q | R | T | U | V | W | X | Y | a | b | d | e | f | g | h | i | j |
|---|---|---|---|---|---|---|---|---|---|---|---|---|---|---|---|---|---|---|---|---|---|---|---|---|---|---|---|---|---|---|---|---|---|
| 20 | 53.5 | 43 | 19 | 9 | M5×0.8 | 4.5 | 25 | 23 | 37.5 | 62 | (4.5) | 50±0.2 | 11.5 | M5×0.8 | M6×1 | 12ℓ | 12 | 12 | 6 | M8×1.25 | 6ℓ | 28 | M4×0.7 | 6 | 18.5ℓ | 5.5 | 9.5 | 5.3 | 53 | 5.5 | 6.5 | 12.5 | 9.5 |
| 25 | 57.5 | 45.5 | 22 | 10 | 1/8" | 6.5 | 30 | 28 | 81.5 | 78 | (2.5) | 60±0.2 | 14 | M6×1 | M6×1 | 14ℓ | 12 | 12 | 6 | M8×1.25 | 6ℓ | 35 | M5×0.8 | 7.5 | 18.5ℓ | 6.9 | 11 | 6.3 | 64 | 7.5 | 9 | 15 | 13 |
| 32 | 67.5 | 54 | 23.5 | 10 | 1/8" | 6.5 | 38 | 36 | 102 | 96 | (5) | 75±0.2 | 18 | M6×1 | M8×1.25 | 16ℓ | 16 | 14 | 8 | M10×1.25 | 8ℓ | 44 | M5×0.8 | 8 | 23ℓ | 6.9 | 11 | 6.6 | 76 | 7.5 | 11.5 | 19 | 20 |

| Bore size | k | ℓ | m | n |
|---|---|---|---|---|
| 20 | 7.75 | 10 | 10 | M6×1 |
| 25 | 8.5 | 12 | 12 | M8×1.25 |
| 32 | 9 | 16 | 12 | M8×1.25 |

| Part No. | S | SS | ZZ | Z |
|---|---|---|---|---|
| NCXS□20-20A | 20 | 92 | 116 | 30 |
| NCXS□20-25A | 25 | 97 | 121 | |
| NCXS□20-30A | 30 | 102 | 126 | 40 |
| NCXS□20-35A | 35 | 107 | 131 | |
| NCXS□20-40A | 40 | 112 | 136 | |
| NCXS□20-45A | 45 | 117 | 141 | |
| NCXS□20-50A | 50 | 122 | 146 | |
| NCXS□20-60A | 60 | 132 | 156 | 60 |
| NCXS□20-70A | 70 | 142 | 166 | |
| NCXS□20-75A | 75 | 147 | 171 | |
| NCXS□20-80A | 80 | 152 | 176 | |
| NCXS□20-90A | 90 | 162 | 186 | |
| NCXS□20-100A | 100 | 172 | 196 | |

| Part No. | S | SS | ZZ | Z |
|---|---|---|---|---|
| NCXS□25-25A | 25 | 100 | 124 | 30 |
| NCXS□25-30A | 30 | 105 | 129 | 40 |
| NCXS□25-35A | 35 | 110 | 134 | |
| NCXS□25-40A | 40 | 115 | 139 | |
| NCXS□25-45A | 45 | 120 | 144 | |
| NCXS□25-50A | 50 | 125 | 149 | |
| NCXS□25-60A | 60 | 135 | 159 | |
| NCXS□25-70A | 70 | 145 | 169 | 60 |
| NCXS□25-75A | 75 | 150 | 174 | |
| NCXS□25-80A | 80 | 155 | 179 | |
| NCXS□25-90A | 90 | 165 | 189 | |
| NCXS□25-100A | 100 | 175 | 199 | |

| Part No. | S | SS | ZZ | Z |
|---|---|---|---|---|
| NCXS□32-25A | 25 | 112 | 142 | 40 |
| NCXS□32-30A | 30 | 117 | 147 | 50 |
| NCXS□32-35A | 35 | 122 | 152 | |
| NCXS□32-40A | 40 | 127 | 157 | |
| NCXS□32-45A | 45 | 132 | 162 | |
| NCXS□32-50A | 50 | 137 | 167 | |
| NCXS□32-60A | 60 | 147 | 177 | 70 |
| NCXS□32-70A | 70 | 157 | 187 | |
| NCXS□32-75A | 75 | 162 | 192 | |
| NCXS□32-80A | 80 | 167 | 197 | |
| NCXS□32-90A | 90 | 177 | 207 | |
| NCXS□32-100A | 100 | 187 | 217 | |

# NCXSW Series
## Dual Rod Cylinder (Double Rod Type)



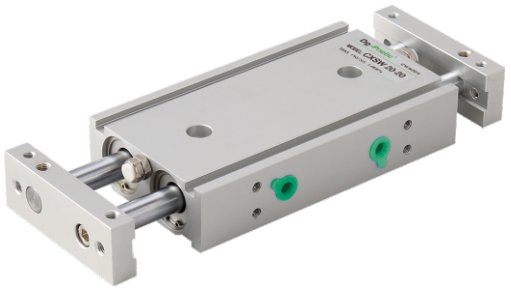

1. Maximum allowable load is 2-3 times larger than NCXS series.
2. Double cylinder design, double output force
3. High accuracy without rotation
4. Side load resistance
5. Standard impact travel adjustment device: 0-10mm

## Specifications

| Bore size(mm) | 6 | 10 | 15 | 20 | 25 | 32 |
|---|---|---|---|---|---|---|
| Fluid | Air | | | | | |
| Action | Double acting | | | | | |
| Maximum operating pressure | 0.7MPa | | | | | |
| Minimum operating pressure | 0.15MPa | | | 0.1MPa | | |
| Ambient and fluid temperature | -10 to 60℃ (No freezing) | | | | | |
| Cushion | Rubber bumper | | | | | |
| Piston speed (mm/s) | 50~500 | | | | | |
| Structure | Double cylinder (Double output force) | | | | | |
| Lubrication Note 1) | Non-lube | | | | | |
| Stroke adjustable range | 0~10mm | | | | | |
| Bearing type | Slide bearing/Ball bushing bearin | | | | | |
| Port size Note 2) | M5×0.8 | | | 1/8" | | |

Note: 1. If lubrication is required, please use turbine No.1 oil ISO VG32.
2. PT thread, G thread and NPT thread are available.

## Ordering code

**N C X S W M 20 – 100 – Z73 □**

**Double rod type**

**Bearing type**

| | |
|---|---|
| M | Slide bearing |
| L | Ball bushing bearing |

**Bore size**

| | |
|---|---|
| 6 | 6mm |
| 10 | 10mm |
| 15 | 15mm |
| 20 | 20mm |
| 25 | 25mm |
| 32 | 32mm |

**Stroke**

Refer to stroke table for details

**Number of magnetic switches**

| | |
|---|---|
| Blank | 2 pcs. |
| S | 1 pc. |
| n | "n" pcs. |

**Magnetic switch type**

| | |
|---|---|
| Blank | Without magnetic switch |

* Magnetic switch type refer stroke /Magnetic switch model table

## Stroke/magnetic switch model table

| Bore size (mm) | Standard stroke Note 1) | Long stroke | Magnetic switch model Rail installation Note 2) |
|---|---|---|---|
| 6 | 10, 20, 30, 40, 50 | | Z73 |
| 10 | 10, 20, 30, 40, 50 | 75,100,125, 50 | |
| 15 | | | |
| 20 | 10, 20, 30, 40, 50 75, 100 | 125,150,175, 200 | |
| 25 | | | |
| 32 | | | |

Note: 1. In case of excess of standard travel, mark -XB11 at the end of the model, Please make a reservation.
2. The specifications and characteristics of magnetic switches can be referred to the series of magnetic switches. Wire length representation mark: no mark-0.5m, L-3m, Z-5m, Example: Z73, Z73L.

## Maximum load mass

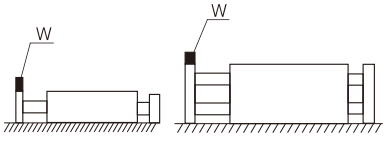


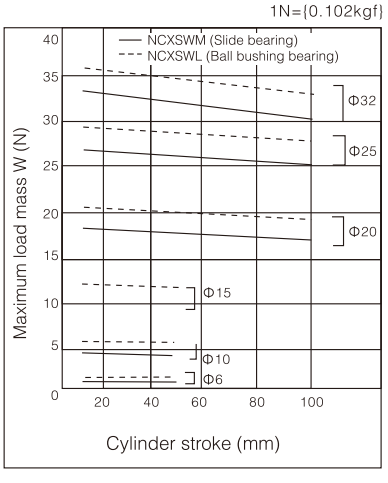


## Deflection at the plate end

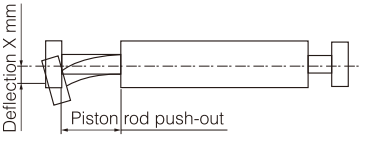


| Bore size (mm) | 6~32 |
|---|---|
| NCXSWM (Slide bearing) | ±0.03mm |
| NCXSWL (Ball bushing bearing) | |

## Non-rotating accuracy

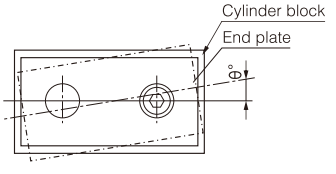


| Bore size (mm) | 6~32 |
|---|---|
| NCXSWM (Slide bearing) | ±0.01° |
| NCXSWL (Ball bushing bearing) | |

## Allowable kinetic energy

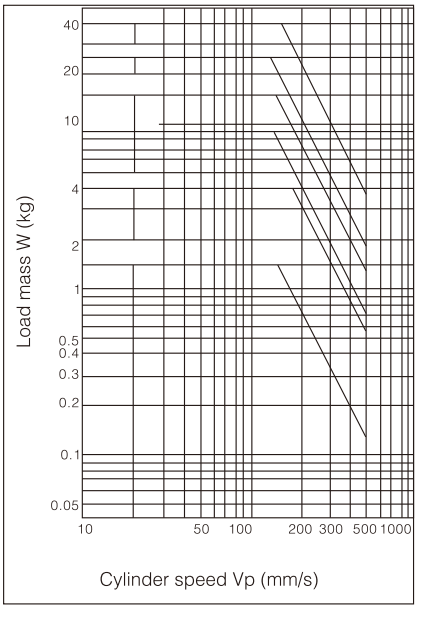

## Dimensions

### NCXSW□6

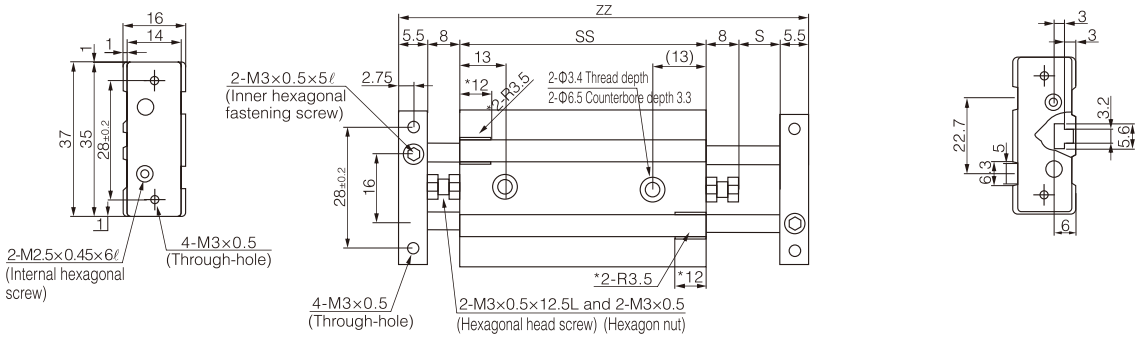


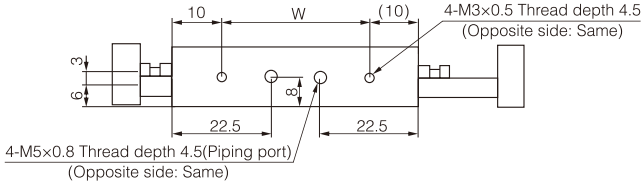


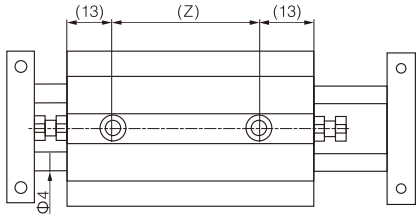


| Model | S | SS | ZZ | Z | W |
|---|---|---|---|---|---|
| NCXSW□6-10 | 10 | 66 | 103 | 40 | 46 |
| NCXSW□6-20 | 20 | 76 | 123 | 50 | 56 |
| NCXSW□6-30 | 30 | 86 | 143 | 60 | 66 |
| NCXSW□6-40 | 40 | 96 | 163 | 70 | 76 |
| NCXSW□6-50 | 50 | 106 | 183 | 80 | 86 |

Only the NCXSW□6-10 and the NCXSW□6-20 have a groove cut out for installing auto switches.
(The dimensions are marked "*".)

### NCXSW□10

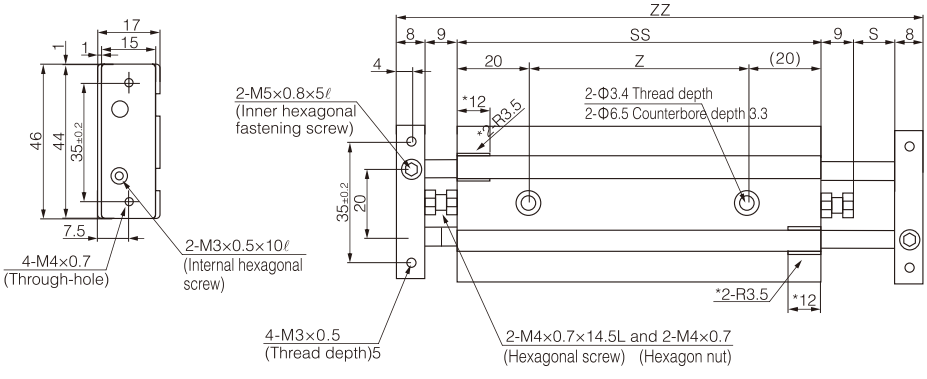


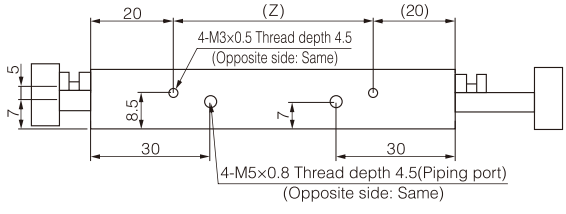


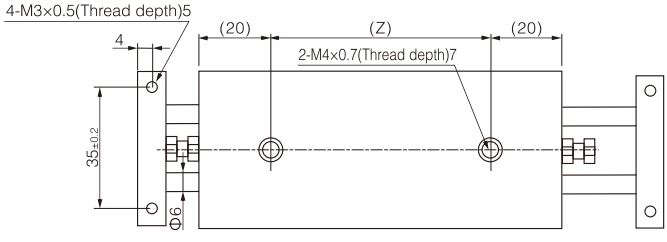


| | Model | S | SS | ZZ | Z |
|---|---|---|---|---|---|
| Standard stroke | NCXSW□10-10 | 10 | 92 | 136 | 52 |
| | NCXSW□10-20 | 20 | 102 | 156 | 62 |
| | NCXSW□10-30 | 30 | 112 | 176 | 72 |
| | NCXSW□10-40 | 40 | 122 | 196 | 82 |
| | NCXSW□10-50 | 50 | 132 | 216 | 92 |
| | NCXSW□10-75 | 75 | 157 | 266 | 117 |
| | NCXSW□10-100 | 100 | 182 | 316 | 142 |
| Long stroke (-XB11) | NCXSW□10-125 | 125 | 207 | 366 | 167 |
| | NCXSW□10-150 | 150 | 232 | 416 | 192 |

Only the NCXSW□10-10 and the NCXSW□10-20 have a groove cut out for installing auto switches.
(The dimensions are marked "*".)

## NCXSW□15

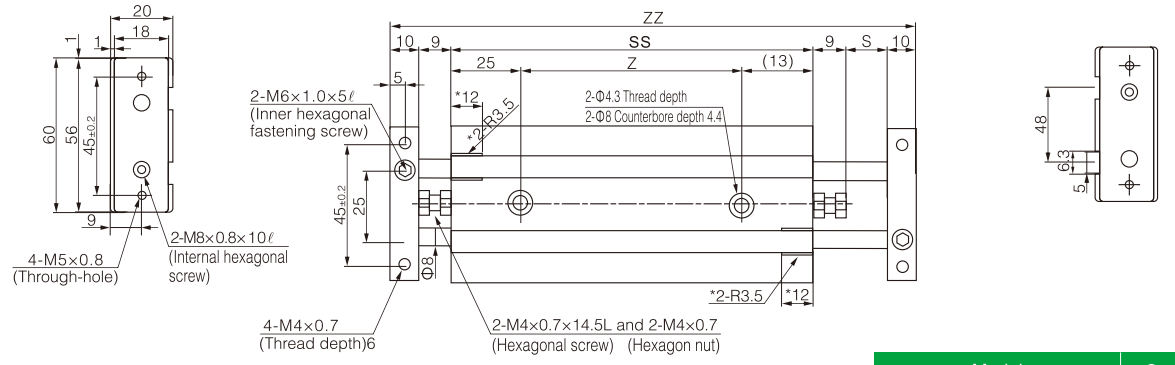


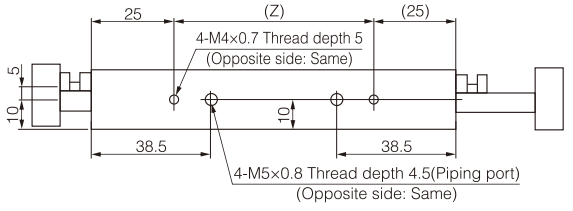


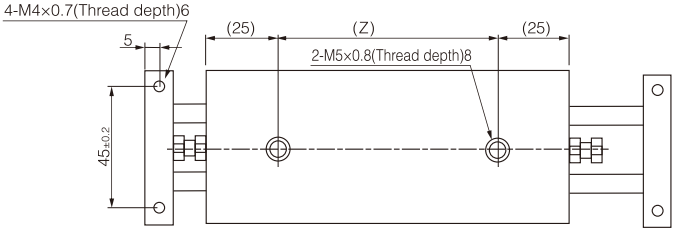


| Model | | S | SS | ZZ | Z |
|---|---|---|---|---|---|
| Standard stroke | NCXSW□15-10 | 10 | 105 | 153 | 55 |
| | NCXSW□15-20 | 20 | 115 | 173 | 65 |
| | NCXSW□15-30 | 30 | 125 | 193 | 75 |
| | NCXSW□15-40 | 40 | 135 | 213 | 85 |
| | NCXSW□15-50 | 50 | 145 | 233 | 95 |
| Long stroke (-XB11) | NCXSW□15-75 | 75 | 170 | 283 | 120 |
| | NCXSW□15-100 | 100 | 195 | 333 | 145 |
| | NCXSW□15-125 | 125 | 220 | 383 | 170 |
| | NCXSW□15-150 | 150 | 245 | 433 | 195 |

Only the NCXSW□15-10 and the NCXSW□15-20 have a groove cut out for installing auto switches.
(The dimensions are marked "*".)

## NCXSW□20

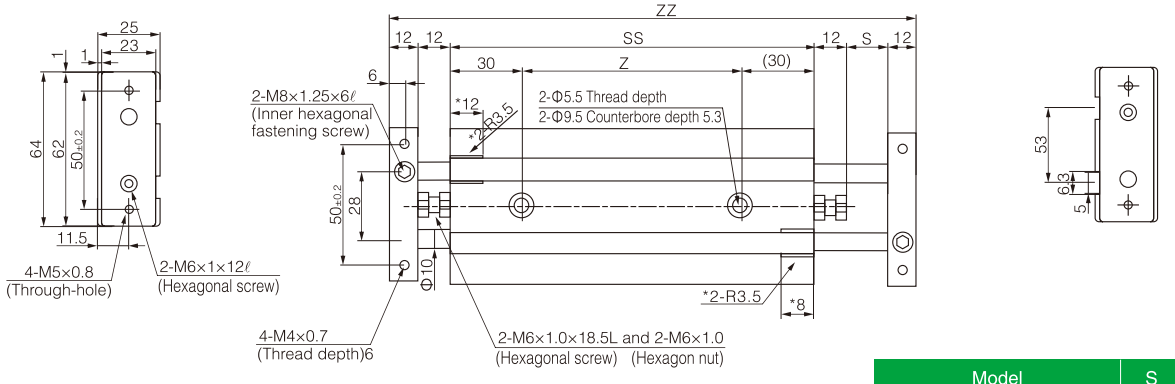


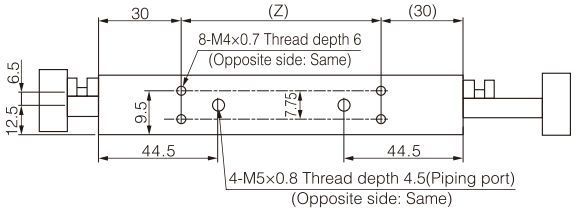


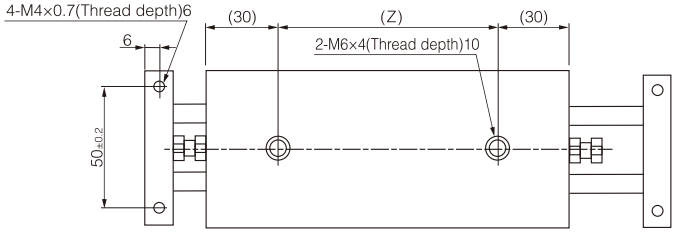


| Model | | S | SS | ZZ | Z |
|---|---|---|---|---|---|
| Standard stroke | NCXSW□-20-10 | 10 | 120 | 178 | 60 |
| | NCXSW□-20-20 | 20 | 130 | 198 | 70 |
| | NCXSW□20-30 | 30 | 140 | 218 | 80 |
| | NCXSW□20-40 | 40 | 150 | 238 | 90 |
| | NCXSW□20-50 | 50 | 160 | 258 | 100 |
| | NCXSW□20-75 | 75 | 165 | 308 | 125 |
| | NCXSW□20-100 | 100 | 210 | 358 | 150 |
| Long stroke (-XB11) | NCXSW□20-125 | 125 | 235 | 408 | 175 |
| | NCXSW□20-150 | 150 | 260 | 458 | 200 |
| | NCXSW□20-175 | 175 | 285 | 508 | 225 |
| | NCXSW□20-200 | 200 | 310 | 558 | 250 |

Only the NCXSW□20-10 has a groove cut out for installing auto switches.
(The dimensions are marked "*".)

## NCXSW□25

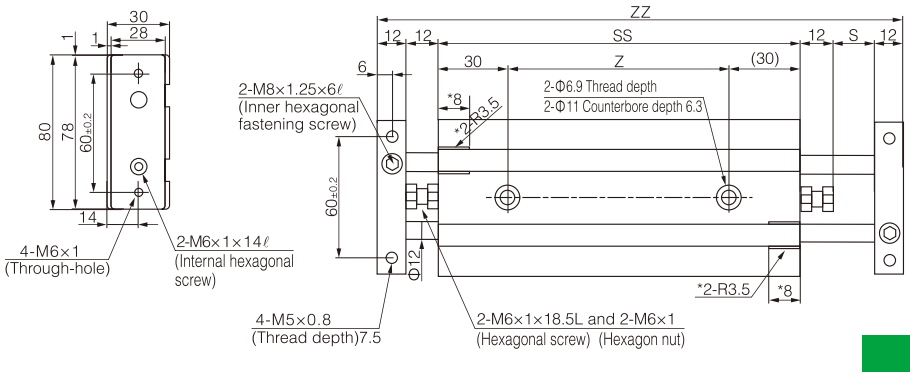


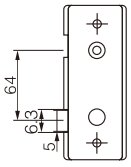

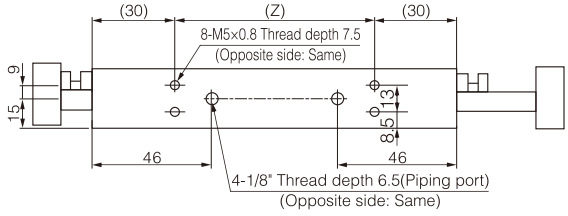


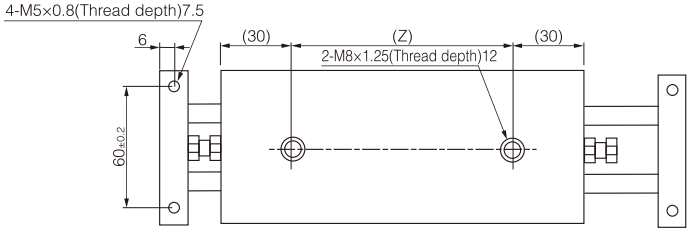


| Model | | S | SS | ZZ | Z |
|---|---|---|---|---|---|
| Standard stroke | NCXSW□25-10 | 10 | 122 | 180 | 62 |
| | NCXSW□25-20 | 20 | 132 | 200 | 72 |
| | NCXSW□25-30 | 30 | 142 | 220 | 82 |
| | NCXSW□25-40 | 40 | 152 | 240 | 92 |
| | NCXSW□25-50 | 50 | 162 | 260 | 102 |
| | NCXSW□25-75 | 75 | 187 | 310 | 127 |
| | NCXSW□25-100 | 100 | 212 | 360 | 152 |
| Long stroke (-XB11) | NCXSW□25-125 | 125 | 237 | 410 | 177 |
| | NCXSW□25-150 | 150 | 262 | 460 | 202 |
| | NCXSW□25-175 | 175 | 287 | 510 | 227 |
| | NCXSW□25-200 | 200 | 321 | 560 | 252 |

Only the NCXSW□25-10 has a groove cut out for installing auto switches.
(The dimensions are marked "*".)

## NCXSW□32

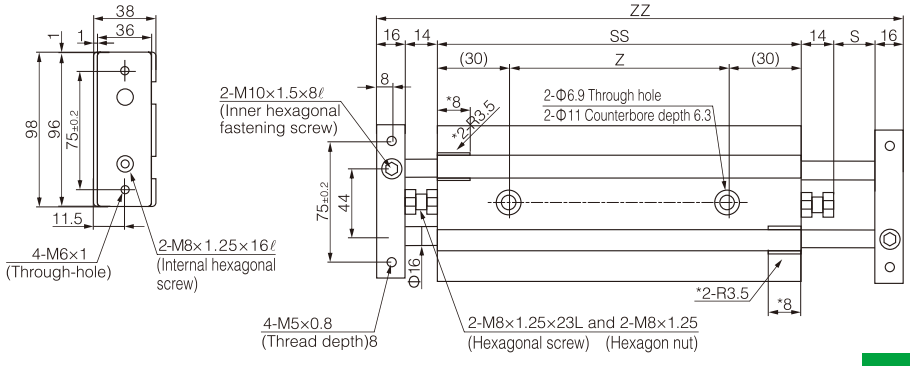


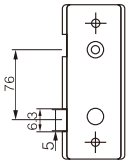

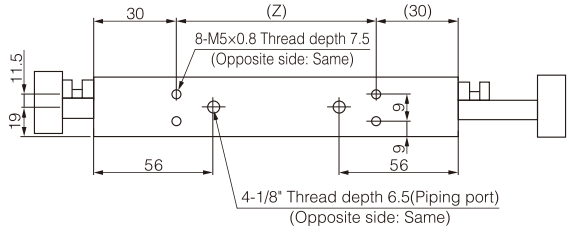


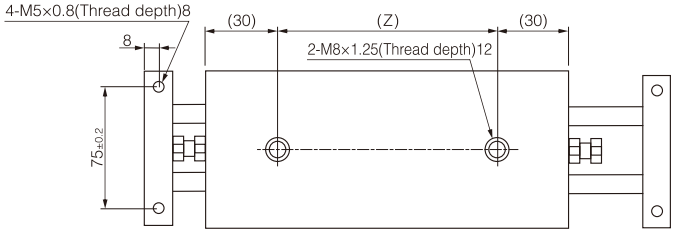


| Model | | S | SS | ZZ | Z |
|---|---|---|---|---|---|
| Standard stroke | NCXSW□32-10 | 10 | 143 | 213 | 83 |
| | NCXSW□32-20 | 20 | 153 | 233 | 93 |
| | NCXSW□32-30 | 30 | 163 | 253 | 103 |
| | NCXSW□32-40 | 40 | 173 | 273 | 113 |
| | NCXSW□32-50 | 50 | 183 | 293 | 123 |
| | NCXSW□32-75 | 75 | 208 | 343 | 148 |
| | NCXSW□32-100 | 100 | 233 | 393 | 173 |
| Long stroke (-XB11) | NCXSW□32-125 | 125 | 258 | 443 | 198 |
| | NCXSW□32-150 | 150 | 283 | 493 | 223 |
| | NCXSW□32-175 | 175 | 308 | 543 | 248 |
| | NCXSW□32-200 | 200 | 333 | 593 | 273 |

Only the NCXSW□32-10 has a groove cut out for installing auto switches.
(The dimensions are marked "*".)

1. Small and light
2. Strong lateral load resistance
3. Strong Torque Resistance
4. High accuracy without rotation
5. Bearings with guide rods can be selected as sliding bearings or ball bearings
6. Easy installation
7. Two-sided nozzle location.

## Specifications

| Bore size(mm) | | 12 | 16 | 20 | 25 | 32 | 40 | 50 | 63 | 80 | 100 |
|---|---|---|---|---|---|---|---|---|---|---|---|
| Fluid | | Air (to be filtered by 40μm filter element) | | | | | | | | | |
| Action | | Double acting | | | | | | | | | |
| Maximum operating pressure | | 1.0MPa | | | | | | | | | |
| Minimum operating pressure | | 0.12MPa | 0.1MPa | | | | | | | | |
| Ambient and fluid temperature | | -10 to 60℃ (No freezing) | | | | | | | | | |
| Piston speed (mm/s) | | 50~500 | | | | | | | | 50~400 | |
| Cushion | | Rubber bumper on both ends | | | | | | | | | |
| Stroke length tolerance (mm) | | $^{+0.15}_{0}$ | | | | | | | | | |
| Lubrication Note) | | Not required (Non-lube) | | | | | | | | | |
| Bearing | | Slide bearing/Ball bushing bearin | | | | | | | | | |
| Non-rotation accuracy of piston rod | Slide bearing | ±0.08° | ±0.07° | | | ±0.06° | | ±0.05° | | ±0.04° | |
| | Ball bushing bearin | ±0.10° | ±0.09° | | | ±0.08° | | ±0.06° | | ±0.05° | |
| Port size | | M5×0.8 | | 1/8" | | | | 1/4" | | 3/8" | |

Note: If lubrication is required, please use turbine No.1 oil ISO VG32.

## Ordering code

**N M G P M 20 □ – 50 – Z73 □**

**Bearing type**

| | |
|---|---|
| M | Slide bearing |
| L | Ball bushing bearing |

**Bore size**

| | | | |
|---|---|---|---|
| 12 | 12mm | 40 | 40mm |
| 16 | 16mm | 50 | 50mm |
| 20 | 20mm | 63 | 63mm |
| 25 | 25mm | 80 | 80mm |
| 32 | 32mm | 100 | 100mm |

**Port thread type**

| | |
|---|---|
| Blank | M5×0.8 |
| | RC |
| N | NPT |
| TF | G |

**Stroke**

Refer to stroke table for details

**Number of magnetic switches**

| | |
|---|---|
| Blank | 2 pcs. |
| S | 1 pc. |

**Magnetic switch type**

| | |
|---|---|
| Blank | Without magnetic switch |

* Magnetic switch type refer stroke /Magnetic switch model table

## Stroke/magnetic switch model table

| Bore size (mm) | Standard stroke Note 1) | Magnetic switch model Rail installation Note 2) |
|---|---|---|
| 12,16 | 10, 20, 30, 40, 50, 75, 100, 125, 150,175, 200, 250 | M9B<br>M9P<br>M9N |
| 20,25 | 20, 30, 40, 50, 75, 100, 125, 150, 175, 200, 250, 300, 350, 400 | |
| 32,40,50, 63,80,100 | 25, 50, 75, 100, 125, 150, 175, 200, 250, 300, 350, 400 | |

Note: 1. Intermediate stroke interval is 1mm (Φ12~Φ32) or 5mm (Φ40~Φ100); if non-standard stroke is required, gaskets should beadded to the non-standard stroke cylinder.
2. The specifications and characteristics of magnetic switches can be referred to the series of magnetic switches. Wire length representation mark: no mark-0.5m, L-3m, Z-5m, Example: M9N, M9NL.

## Load and torque

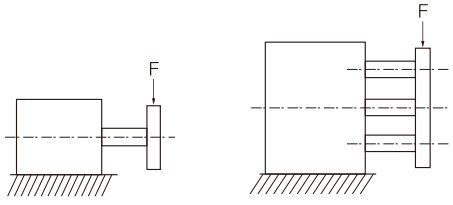


Torque: T [N·m]

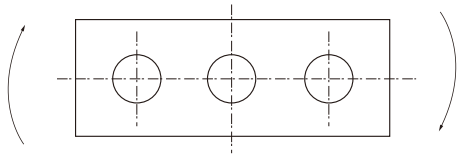

| Bore size (mm) | Bearing type | Maximum lateral load F(N) Stroke | | | | | | | | | | | | | | | | Maximum torque T(N.m) Stroke | | | | | | | | | | | | | | | |
|---|---|---|---|---|---|---|---|---|---|---|---|---|---|---|---|---|---|---|---|---|---|---|---|---|---|---|---|---|---|---|---|---|---|
| | | 10 | 20 | 25 | 30 | 40 | 50 | 75 | 100 | 125 | 150 | 175 | 200 | 250 | 300 | 350 | 400 | 10 | 20 | 25 | 30 | 40 | 50 | 75 | 100 | 125 | 150 | 175 | 200 | 250 | 300 | 350 | 400 |
| 12 | NMGPM | 24 | 19 | - | 17 | 14 | 13 | 26 | 22 | 19 | 17 | 15 | 13 | 11 | - | - | - | 0.39 | 0.32 | - | 0.27 | 0.24 | 0.21 | 0.43 | 0.36 | 0.31 | 0.27 | 0.24 | 0.22 | 0.19 | - | - | - |
| | NMGPL | 37 | 27 | - | 22 | 35 | 30 | 23 | 18 | 15 | 12 | 11 | 10 | 8 | - | - | - | 0.61 | 0.45 | - | 0.35 | 0.58 | 0.50 | 0.37 | 0.29 | 0.24 | 0.20 | 0.18 | 0.16 | 0.12 | - | - | - |
| 16 | NMGPM | 38 | 31 | - | 27 | 23 | 21 | 37 | 32 | 27 | 24 | 22 | 20 | 16 | - | - | - | 0.69 | 0.58 | - | 0.49 | 0.43 | 0.38 | 0.69 | 0.58 | 0.50 | 0.44 | 0.40 | 0.36 | 0.30 | - | - | - |
| | NMGPL | 54 | 40 | - | 32 | 54 | 47 | 35 | 28 | 23 | 20 | 17 | 15 | 12 | - | - | - | 0.99 | 0.74 | - | 0.59 | 0.99 | 0.86 | 0.65 | 0.52 | 0.43 | 0.37 | 0.32 | 0.28 | 0.23 | - | - | - |
| 20 | NMGPM | - | 49 | - | 43 | 38 | 35 | 87 | 75 | 66 | 59 | 54 | 49 | 42 | 36 | 32 | 29 | - | 1.05 | - | 0.93 | 0.83 | 0.75 | 1.88 | 1.63 | 1.44 | 1.28 | 1.16 | 1.06 | 0.90 | 0.78 | 0.69 | 0.62 |
| | NMGPL | - | 58 | - | 48 | 101 | 90 | 70 | 58 | 62 | 54 | 48 | 43 | 35 | 30 | 26 | 23 | - | 1.26 | - | 1.03 | 2.17 | 1.94 | 1.52 | 1.25 | 1.34 | 1.17 | 1.03 | 1.93 | 0.76 | 0.65 | 0.56 | 0.49 |
| 25 | NMGPM | - | 69 | - | 60 | 54 | 49 | 116 | 100 | 88 | 79 | 71 | 65 | 55 | 48 | 43 | 38 | - | 1.76 | - | 1.55 | 1.38 | 1.25 | 2.96 | 2.57 | 2.26 | 2.02 | 1.83 | 1.67 | 1.42 | 1.24 | 1.09 | 0.98 |
| | NMGPL | - | 82 | - | 68 | 132 | 118 | 93 | 77 | 80 | 70 | 62 | 55 | 45 | 38 | 33 | 29 | - | 2.11 | - | 1.75 | 3.37 | 3.02 | 2.38 | 1.97 | 2.05 | 1.78 | 1.58 | 1.41 | 1.16 | 0.98 | 0.85 | 0.74 |
| 32 | NMGPM | - | - | 203 | - | - | 164 | 182 | 159 | 142 | 127 | 116 | 106 | 91 | 80 | 71 | 64 | - | - | 6.35 | - | - | 5.13 | 5.69 | 4.97 | 4.42 | 3.98 | 3.61 | 3.31 | 2.84 | 2.48 | 2.20 | 1.98 |
| | NMGPL | - | - | 191 | - | - | 157 | 164 | 144 | 203 | 186 | 171 | 158 | 137 | 121 | 108 | 98 | - | - | 5.95 | - | - | 4.89 | 5.11 | 4.51 | 6.34 | 5.79 | 5.33 | 4.93 | 4.29 | 3.78 | 3.38 | 3.04 |
| 40 | NMGPM | - | - | 203 | - | - | 164 | 182 | 159 | 142 | 127 | 116 | 106 | 91 | 80 | 71 | 64 | - | - | 7.00 | - | - | 5.66 | 6.27 | 5.48 | 4.87 | 4.38 | 3.98 | 3.65 | 3.13 | 2.74 | 2.43 | 2.19 |
| | NMGPL | - | - | 190 | - | - | 157 | 163 | 144 | 203 | 185 | 171 | 158 | 137 | 121 | 108 | 97 | - | - | 6.55 | - | - | 5.39 | 5.62 | 4.96 | 6.98 | 6.38 | 5.87 | 5.43 | 4.72 | 4.16 | 3.71 | 3.35 |
| 50 | NMGPM | - | - | 296 | - | - | 245 | 273 | 241 | 216 | 195 | 179 | 164 | 142 | 125 | 111 | 101 | - | - | 13.0 | - | - | 10.8 | 12.0 | 10.6 | 9.50 | 8.60 | 7.86 | 7.24 | 6.24 | 5.49 | 4.90 | 4.43 |
| | NMGPL | - | - | 208 | - | - | 173 | 223 | 199 | 264 | 242 | 224 | 207 | 181 | 159 | 142 | 128 | - | - | 9.17 | - | - | 7.62 | 9.83 | 8.74 | 11.6 | 10.7 | 9.83 | 9.12 | 7.95 | 7.02 | 6.26 | 5.63 |
| 63 | NMGPM | - | - | 296 | - | - | 245 | 273 | 241 | 216 | 195 | 179 | 164 | 142 | 125 | 111 | 101 | - | - | 14.7 | - | - | 12.1 | 13.5 | 11.9 | 10.7 | 9.69 | 8.86 | 8.16 | 7.04 | 6.19 | 5.52 | 4.99 |
| | NMGPL | - | - | 206 | - | - | 171 | 221 | 196 | 262 | 240 | 221 | 205 | 178 | 157 | 140 | 126 | - | - | 10.2 | - | - | 8.48 | 11.0 | 9.74 | 13.0 | 11.9 | 11.0 | 10.2 | 8.84 | 7.80 | 6.94 | 6.24 |
| 80 | NMGPM | - | - | 352 | - | - | 297 | 368 | 329 | 298 | 272 | 251 | 232 | 202 | 179 | 161 | 146 | - | - | 21.9 | - | - | 18.6 | 22.9 | 20.5 | 18.6 | 17.0 | 15.6 | 14.5 | 12.6 | 11.2 | 10.0 | 9.11 |
| | NMGPL | - | - | 243 | - | - | 373 | 364 | 331 | 302 | 278 | 256 | 238 | 207 | 181 | 161 | 143 | - | - | 15.1 | - | - | 23.3 | 22.7 | 20.6 | 18.9 | 17.3 | 16.0 | 14.8 | 12.9 | 11.3 | 10.0 | 8.94 |
| 100 | NMGPM | - | - | 515 | - | - | 445 | 498 | 450 | 410 | 377 | 349 | 325 | 285 | 254 | 229 | 208 | - | - | 38.8 | - | - | 33.5 | 37.5 | 33.8 | 30.9 | 28.4 | 26.2 | 24.4 | 21.4 | 19.1 | 17.2 | 15.7 |
| | NMGPL | - | - | 360 | - | - | 407 | 503 | 460 | 423 | 390 | 362 | 337 | 294 | 259 | 230 | 206 | - | - | 27.1 | - | - | 30.6 | 37.9 | 34.6 | 31.8 | 29.3 | 27.2 | 25.3 | 22.1 | 19.5 | 17.3 | 15.5 |

## Dimensions

**Φ12~Φ25**

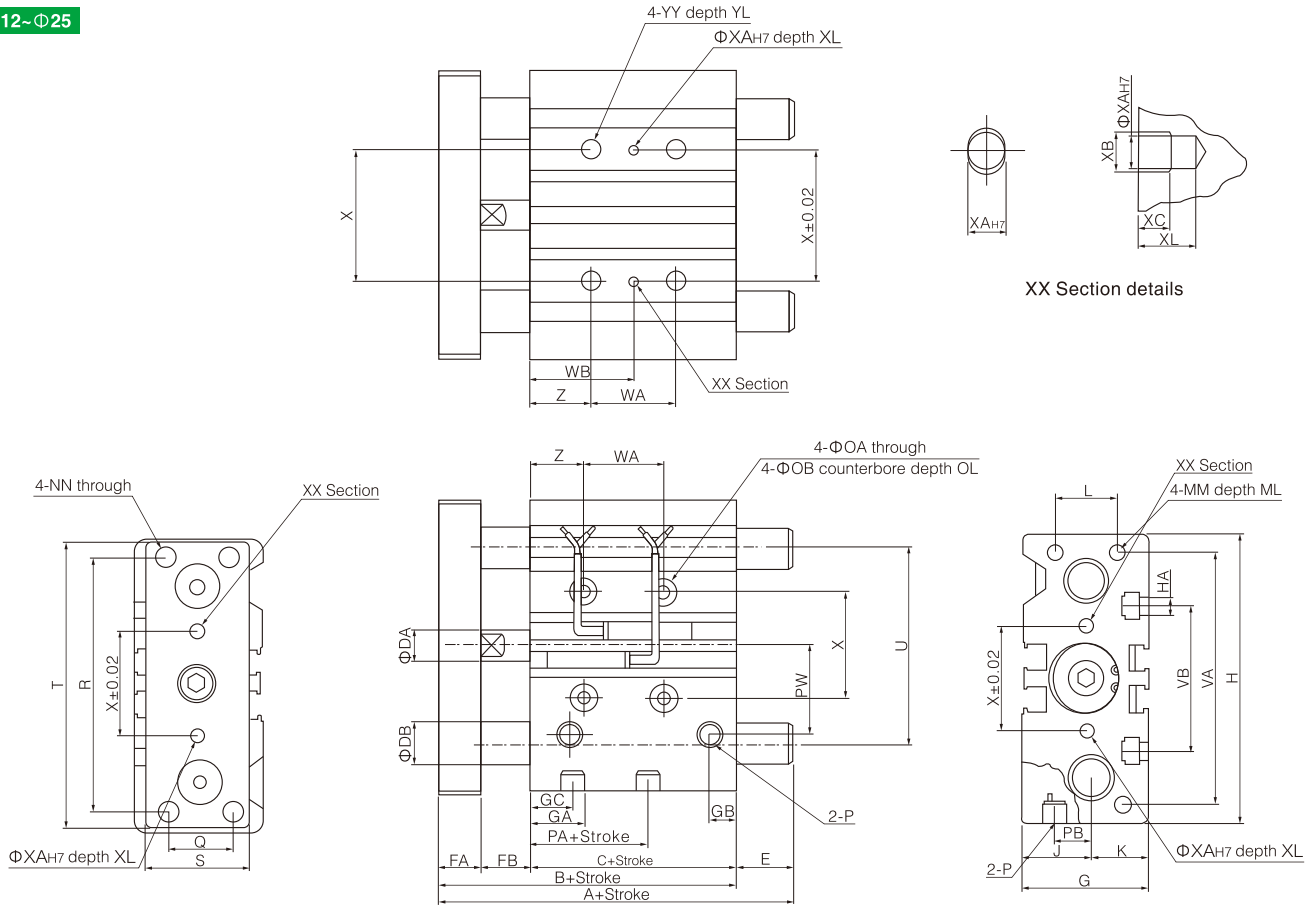


### NMGPM, NMGPL Common dimensions

St=Stroke

| Bore size (mm) | Standard stroke | B | C | DA | FA | FB | G | GA | GB | H | HA | J | K | L | MM | ML | NN | OA | OB | OL | P | PA | PB | PW | Q |
|---|---|---|---|---|---|---|---|---|---|---|---|---|---|---|---|---|---|---|---|---|---|---|---|---|---|
| 12 | 10,20,30,40,50,75,100125,150,175,200,250 | 42 | 29 | 6 | 8 | 5 | 26 | 11 | 7.5 | 58 | M4 | 13 | 13 | 18 | M4×0.7 | 10 | M4×0.7 | 4.3 | 8 | 4.5 | M5×0.8 | 13 | 8 | 18 | 14 |
| 16 | | 46 | 33 | 8 | 8 | 5 | 30 | 11 | 8 | 64 | M4 | 15 | 15 | 22 | M5×0.8 | 12 | M5×0.8 | 4.3 | 8 | 4.5 | M5×0.8 | 15 | 10 | 19 | 16 |
| 20 | 20,30,40,50,75,100,125,150,175,200,250,300,350,400, | 53 | 37 | 10 | 10 | 6 | 36 | 10.5 | 8.5 | 83 | M5 | 18 | 18 | 24 | M5×0.8 | 13 | M5×0.8 | 5.6 | 9.5 | 5.5 | 1/8" | 12.5 | 10.5 | 25 | 18 |
| 25 | | 53.5 | 37.5 | 12 | 10 | 6 | 42 | 11.5 | 9 | 93 | M5 | 21 | 21 | 30 | M6×1.0 | 15 | M6×1.0 | 5.6 | 9.5 | 5.5 | 1/8" | 12.5 | 13.5 | 28.5 | 26 |

| Bore size (mm) | Standard stroke | R | S | T | U | VA | VB | WA | | | | | WB | | | | | X | XA | XB | XC | XL | YY | YL | Z |
|---|---|---|---|---|---|---|---|---|---|---|---|---|---|---|---|---|---|---|---|---|---|---|---|---|---|
| | | | | | | | | 30 st or less | 30st ~100st | 100st ~200st | 200st ~300st | Over 300 st | 30 st or less | 30st ~100st | 100st ~200st | 200st ~300st | Over 300 st | | | | | | | | |
| 12 | 10,20,30,40,50,75,100125,150,175,200,250 | 48 | 22 | 56 | 41 | 50 | 37 | 20 | 40 | 110 | 200 | - | 15 | 25 | 60 | 105 | - | 23 | 3 | 3.5 | 3 | 6 | M5×0.8 | 10 | 5 |
| 16 | | 54 | 25 | 62 | 46 | 56 | 38 | 24 | 44 | 100 | 200 | - | 17 | 27 | 60 | 105 | - | 24 | 3 | 3.5 | 3 | 6 | M5×0.8 | 10 | 5 |
| 20 | 20,30,40,50,75,100,125,150,175,200,250,300,350,400, | 70 | 30 | 81 | 54 | 72 | 44 | 24 | 44 | 120 | 200 | 300 | 29 | 39 | 77 | 117 | 167 | 28 | 3 | 3.5 | 3 | 6 | M6×1.0 | 12 | 17 |
| 25 | | 78 | 38 | 91 | 64 | 82 | 50 | 24 | 44 | 120 | 200 | 300 | 29 | 39 | 77 | 117 | 167 | 34 | 4 | 4.5 | 3 | 6 | M6×1.0 | 12 | 17 |

### NMGPM (Slide bearing) A, DB, E dimensions

| Bore size (mm) | A | | | DB | E | | |
|---|---|---|---|---|---|---|---|
| | 50st≥ | 50st< 100st≥ | 100st< | | 50st≥ | 50st< 100st≥ | 100st< |
| 12 | 42 | 60.5 | 85 | 8 | 0 | 18.5 | 43 |
| 16 | 46 | 64.5 | 95 | 10 | 0 | 18.5 | 49 |

### NMGPL (Ball bushing) A, DB, E dimensions

| Bore size (mm) | A | | | DB | E | | |
|---|---|---|---|---|---|---|---|
| | 30st≥ | 30st< 100st≥ | 100st< | | 30st≥ | 30st< 100st≥ | 100st< |
| 12 | 43 | 55 | 85 | 6 | 1 | 13 | 43 |
| 16 | 49 | 65 | 95 | 8 | 3 | 19 | 49 |

### NMGPM (Slide bearing) A, DB, E dimensions

| Bore size (mm) | A | | | DB | E | | |
|---|---|---|---|---|---|---|---|
| | 50st≥ | 50st< 200st≥ | 200st< | | 50st≥ | 50st< 200st≥ | 200st< |
| 20 | 53 | 84.5 | 122 | 12 | 0 | 31.5 | 69 |
| 25 | 53.5 | 85 | 122 | 16 | 0 | 31.5 | 68.5 |

### NMGPL (Ball bushing) A, DB, E dimensions

| Bore size (mm) | A | | | | DB | E | | | |
|---|---|---|---|---|---|---|---|---|---|
| | 30st≥ | 30st< 100st≥ | 100st< 200st≥ | 200st< | | 30st≥ | 30st< 100st≥ | 100st< 200st≥ | 200st< |
| 20 | 63 | 80 | 104 | 122 | 10 | 10 | 27 | 51 | 69 |
| 25 | 69.5 | 80.5 | 104.5 | 122 | 13 | 16 | 32 | 51 | 68.5 |

**Φ32~Φ63**

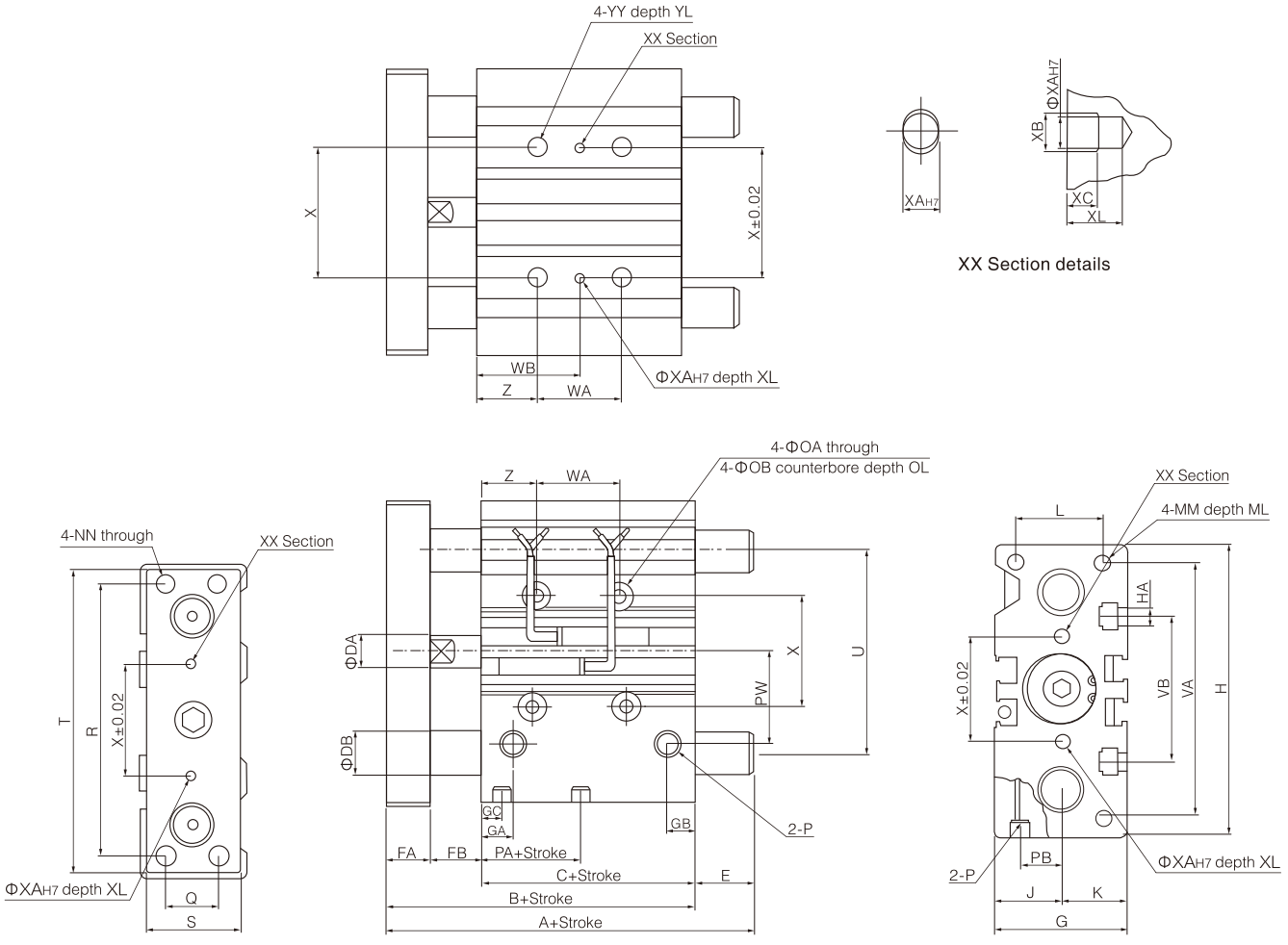


## NMGPM, NMGPL Common dimensions

St=Stroke

| Bore size (mm) | Standard stroke | B | C | DA | FA | FB | G | GA | GB | GC | H | HA | J | K | L | MM | ML | NN | OA | OB | OL | P | PA | PB | PW | Q |
|---|---|---|---|---|---|---|---|---|---|---|---|---|---|---|---|---|---|---|---|---|---|---|---|---|---|---|
| 32 | 20,50,75, 100,125,150, 175,200,250, 300,350,400, | 59.5 | 37.5 | 16 | 12 | 10 | 48 | 12.5 | 9 | 12.5 | 112 | M6 | 24 | 24 | 34 | M8×1.25 | 20 | M8×1.25 | 6.6 | 11 | 7.5 | 1/8" | 7 | 15 | 34 | 30 |
| 40 | | 66 | 44 | 16 | 12 | 10 | 54 | 14 | 10 | 14 | 120 | M6 | 27 | 27 | 40 | M8×1.25 | 20 | M8×1.25 | 6.6 | 11 | 7.5 | 1/8" | 13 | 18 | 38 | 30 |
| 50 | | 72 | 44 | 20 | 16 | 12 | 64 | 14 | 11 | 12 | 148 | M8 | 32 | 32 | 46 | M10×1.5 | 22 | M10×1.5 | 8.6 | 14 | 9 | 1/4" | 9 | 21.5 | 47 | 40 |
| 63 | | 77 | 49 | 20 | 16 | 12 | 78 | 16.5 | 13.5 | 16.5 | 162 | M10 | 39 | 39 | 58 | M10×1.5 | 22 | M10×1.5 | 8.6 | 14 | 9 | 1/4" | 14 | 28 | 55 | 50 |

| Bore size (mm) | R | S | T | U | VA | VB | WA | | | | | WB | | | | | X | XA | XB | XC | XL | YY | YL | Z |
|---|---|---|---|---|---|---|---|---|---|---|---|---|---|---|---|---|---|---|---|---|---|---|---|---|
| | | | | | | | 25 st or less | 25st ~100st | 100st ~200st | 200st ~300st | Over 300 st | 25 st or less | 25st ~100st | 100st ~200st | 200st ~300st | Over 300 st | | | | | | | | |
| 32 | 96 | 44 | 110 | 78 | 98 | 63 | 24 | 48 | 124 | 200 | 300 | 33 | 45 | 83 | 121 | 171 | 42 | 4 | 4.5 | 3 | 6 | M8×1.25 | 16 | 21 |
| 40 | 104 | 44 | 118 | 86 | 106 | 72 | 24 | 48 | 124 | 200 | 300 | 34 | 46 | 84 | 122 | 172 | 50 | 4 | 4.5 | 3 | 6 | M8×1.25 | 16 | 22 |
| 60 | 130 | 60 | 146 | 110 | 130 | 92 | 24 | 48 | 124 | 200 | 300 | 36 | 48 | 86 | 124 | 174 | 66 | 5 | 6 | 4 | 8 | M10×1.5 | 20 | 24 |
| 63 | 130 | 70 | 158 | 124 | 142 | 110 | 28 | 52 | 128 | 200 | 300 | 38 | 50 | 88 | 124 | 174 | 80 | 5 | 6 | 4 | 8 | M10×1.5 | 20 | 24 |

## NMGPM (Slide bearing) A, DB, E dimensions

| Bore size (mm) | A | | | DB | E | | |
|---|---|---|---|---|---|---|---|
| | 50st≥ | 50st< 100st≥ | 200st≥ | | 50st≥ | 50st< 200st≥ | 200st≥ |
| 32 | 97 | 102 | 140 | 20 | 37.5 | 42.5 | 80.5 |
| 40 | 97 | 102 | 140 | 20 | 31 | 36 | 74 |
| 50 | 106.5 | 118 | 161 | 25 | 34.5 | 46 | 89 |
| 63 | 106.5 | 118 | 161 | 25 | 29.5 | 41 | 84 |

## NMGPL (Ball bushing) A, DB, E dimensions

| Bore size (mm) | A | | | | DB | E | | | |
|---|---|---|---|---|---|---|---|---|---|
| | 50st≥ | 50st< 100st≥ | 100st< 200st≥ | 200st< | | 50st≥ | 50st< 100st≥ | 100st< 200st≥ | 200st< |
| 32 | 81 | 98 | 118 | 140 | 16 | 21.5 | 38.5 | 58.5 | 80 |
| 40 | 81 | 98 | 118 | 140 | 16 | 15 | 32 | 52 | 74 |
| 50 | 93 | 114 | 134 | 161 | 20 | 21 | 42 | 62 | 89 |
| 63 | 93 | 114 | 134 | 161 | 20 | 16 | 37 | 57 | 84 |

**Φ82~Φ100**

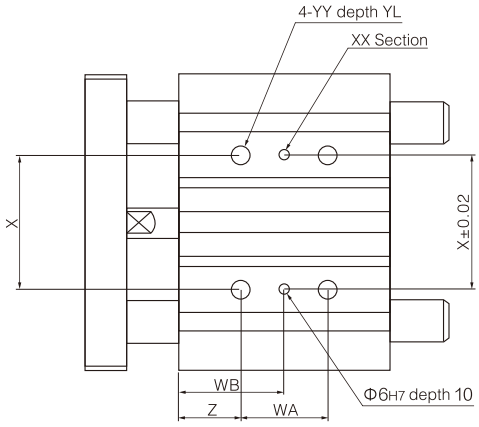


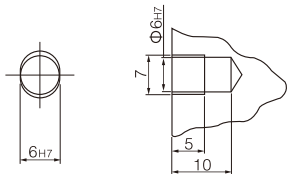


XX Section details

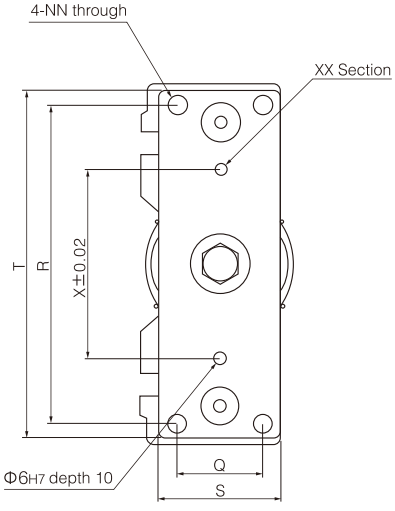


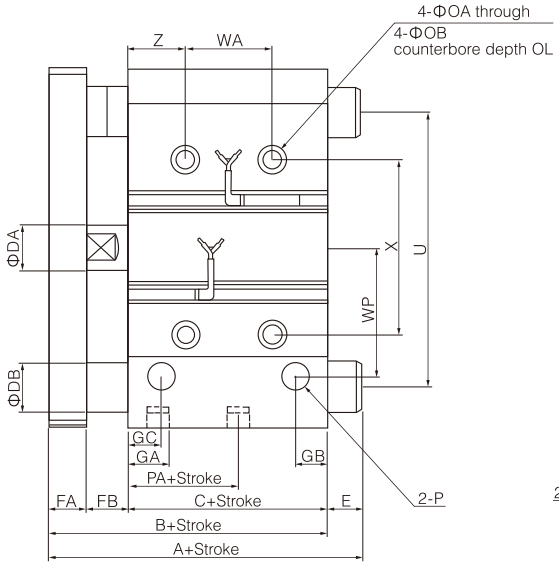


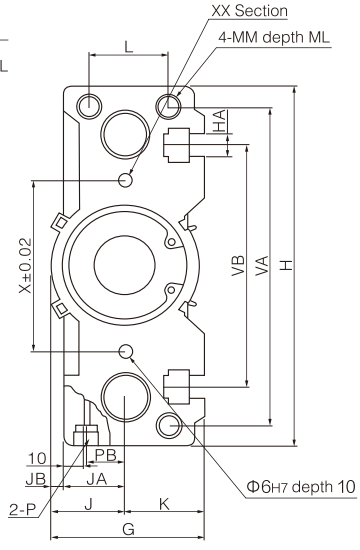


NMGPM, NMGPL Common dimensions

St=Stroke

| Bore size (mm) | Standard stroke | B | C | DA | FA | FB | G | GA | GB | GC | H | HA | J | JA | JB | K | L | MM | ML | NN | OA | OB | OL | P | PA | PB | PW |
|---|---|---|---|---|---|---|---|---|---|---|---|---|---|---|---|---|---|---|---|---|---|---|---|---|---|---|---|
| 80 | 25,50,75,100, 125,150,175,200, 250,300,350,400, | 96.5 | 56.5 | 25 | 22 | 18 | 91.5 | 19 | 15.5 | 14.5 | 202 | M12 | 45.5 | 38 | 7.5 | 46 | 54 | M12×1.75 | 25 | M12×1.75 | 10.6 | 17.5 | 8 | 3/8" | 14.5 | 25.5 | 74 |
| 100 | | 116 | 66 | 30 | 25 | 25 | 111.5 | 23 | 19 | 18 | 240 | M14 | 55.5 | 45 | 10.5 | 56 | 62 | M14×2.0 | 31 | M14×2.0 | 12.5 | 20 | 8 | 3/8" | 17.5 | 32.5 | 89 |

| Bore size (mm) | Standard stroke | Q | R | S | T | U | VA | VB | WA | | | | | WB | | | | | X | YY | YL | Z |
|---|---|---|---|---|---|---|---|---|---|---|---|---|---|---|---|---|---|---|---|---|---|---|
| | | | | | | | | | 25 st | 25st ~100st | 100st ~200st | 200st ~300st | Over 300 st | 25 st | 25st ~100st | 100st ~200st | 200st ~300st | Over 300 st | | | | |
| 80 | 25,50,75,100, 125,150,175,200, 250,300,350,400, | 52 | 174 | 75 | 198 | 156 | 180 | 140 | 28 | 52 | 128 | 200 | 300 | 42 | 54 | 92 | 128 | 178 | 100 | M12×1.75 | 24 | 28 |
| 100 | | 64 | 210 | 90 | 236 | 188 | 210 | 166 | 48 | 72 | 148 | 200 | 300 | 35 | 47 | 85 | 121 | 171 | 124 | M14×2.0 | 28 | 11 |

NMGPM (Slide bearing)

| Bore size (mm) | A | | | DB | E | | |
|---|---|---|---|---|---|---|---|
| | 50st≥ | 50st< 200st≥ | 200st< | | 50st≥ | 50st< 200st≥ | 200st< |
| 80 | 115 | 142 | 193 | 30 | 18.5 | 45.5 | 96.5 |
| 100 | 137 | 162 | 203 | 36 | 21 | 46 | 87 |

NMGPL (Ball bushing)

| Bore size (mm) | A | | | | DB | E | | | |
|---|---|---|---|---|---|---|---|---|---|
| | 25st≥ | 25st< 50st≥ | 50st< 200st≥ | 200st< | | 25st≥ | 25st< 50st≥ | 50st< 200st≥ | 200st< |
| 80 | 109.5 | 130 | 160 | 193 | 25 | 13 | 33.5 | 63.5 | 96.5 |
| 100 | 121 | 147 | 180 | 203 | 30 | 5 | 31 | 64 | 87 |

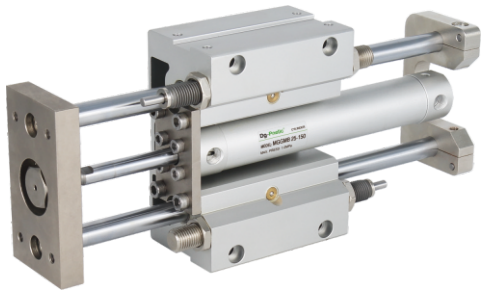

1. Built-in hydraulic buffer
2. With travel adjustment mechanism
3. Strong lateral load resistance
4. High accuracy without rotation
5. Bearings with guide rods can be selected as sliding bearings or ball bearings

## Specifications

| Bore size(mm) | | 20 | 25 | 32 | 40 | 50 | 63 | 80 | 100 |
|---|---|---|---|---|---|---|---|---|---|
| Fluid | | Air (to be filtered by 40μm filter element) | | | | | | | |
| Action | | Double acting | | | | | | | |
| Maximum operating pressure | | 1.0MPa | | | | | | | |
| Minimum operating pressure | | 0.15MPa | | | | | | | |
| Ambient and fluid temperature | | -10 to 60℃ (No freezing) | | | | | | | |
| Piston speed (mm/s) | | 50~1000 | | | | | | 50~700 | |
| Cushion | | Built-in shock absorbers (2 pcs.) | | | | | | | |
| Stroke length tolerance (mm) | | $\sim 1000^{+1.9}_{+0.2}$ $1001\sim 1300^{+2.3}_{+0.2}$ | | | | | | | |
| Stroke adjusting range (One side)(mm) | | 0~-10 | 0~-15 | | | | | | |
| Maximum energy absorption (J) | | 5.88 | 19.6 | | 58.8 | | | 147 | |
| Lubrication Note) | | Not required (Non-lube) | | | | | | | |
| Bearing | | Slide bearing/Ball bushing bearin | | | | | | | |
| Non-rotation accuracy of piston rod | Slide bearing | ±0.07° | ±0.06° | ±0.06° | ±0.05° | ±0.04° | ±0.04° | ±0.04° | ±0.03° |
| | Ball bushing bearin | ±0.06° | ±0.05° | ±0.04° | ±0.04° | ±0.04° | ±0.03° | ±0.03° | ±0.02° |
| Port size | | 1/8" | | | | 1/4" | | 3/8" | 1/2" |

Note: 1. If lubrication is required, please use turbine No.1 oil ISO VG32.
2. PT thread, G thread and NPT thread are available.

## Ordering code

**NMGG L B 32 – 100 – C73 □**

**Bearing type**

| | |
|---|---|
| M | Slide bearing |
| L | Ball bushing |

**Mounting type**

| | |
|---|---|
| B | Basic type |
| F | Front mounting flange type |

**Bore size**

| | |
|---|---|
| 20 | 20mm |
| 25 | 25mm |
| 32 | 32mm |
| 40 | 40mm |
| 50 | 50mm |
| 63 | 63mm |
| 80 | 80mm |
| 100 | 100mm |

**Stroke**

Refer to stroke table for details

**Number of magnetic switches**

| | |
|---|---|
| Blank | 2 pcs. |
| S | 1 pc. |
| n | "n" pcs. |

**Magnetic switch type**

| | |
|---|---|
| Blank | Without magnetic switch |

* Magnetic switch type refer stroke /Magnetic switch model table

## Stroke/magnetic switch model table

| Bore size (mm) | Standard stroke | Long stroke (mm) | Magnetic switch model (Ring installation) Note) |
|---|---|---|---|
| 20 | 75,100,125,150,200 | 250,300,350,400 | C73 |
| 25 | 75,100,125 150,200 250,300 | 350,400,450,500 | |
| 32 | | 350,400,450,500,600 | |
| 40 | | 350,400,450,500,600,700,800 | |
| 50 | | 350,400,450,500,600, 700,800,900,1000 | |
| 63 | | 350,400,450,500,600, 700,800,900,1000,1100 | |
| 80 | | 350,400,450,500,600,700, 800,900,1000,1100,1200 | B54 |
| 100 | | 350,400,450,500,600,700, 800,900,1000,1100,1200,1300 | |

Note: The specifications and characteristics of magnetic switches can be referred to the series of magnetic switches.
Wire length representation mark: no mark-0.5m, L-3m, Z-5m,
Example: C73, C73L.

## Magnetic switch installation type

| Magnetic switch type | Bore size(mm) | | | | | | | |
|---|---|---|---|---|---|---|---|---|
| | 20 | 25 | 32 | 40 | 50 | 63 | 80 | 100 |
| D-C7・H7 | BMA2 -020 | BMA2 -025 | BMA2 -032 | BMA2 -040 | BMA2 -050 | BMA2 -063 | - | - |
| D-B5・G5・K5 | BA-01 | BA-02 | BA-32 | BA-04 | BA-05 | BA-06 | BA-08 | BA-10 |

## Built-in hydraulic buffer

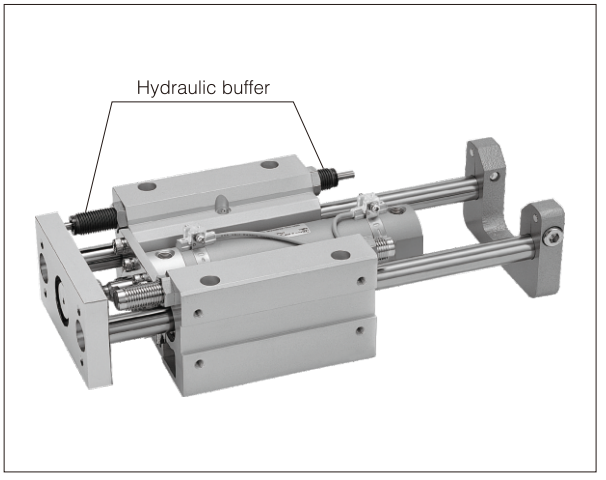


## Stroke adjustment device

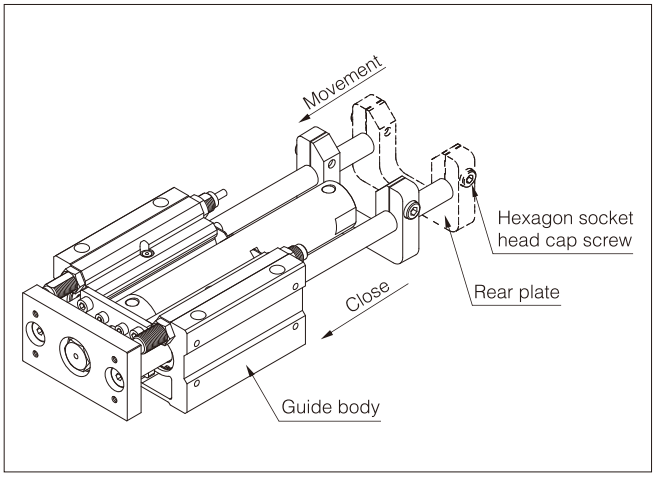

## Dimensions

**Basic type** NMGG□B Φ20~Φ50

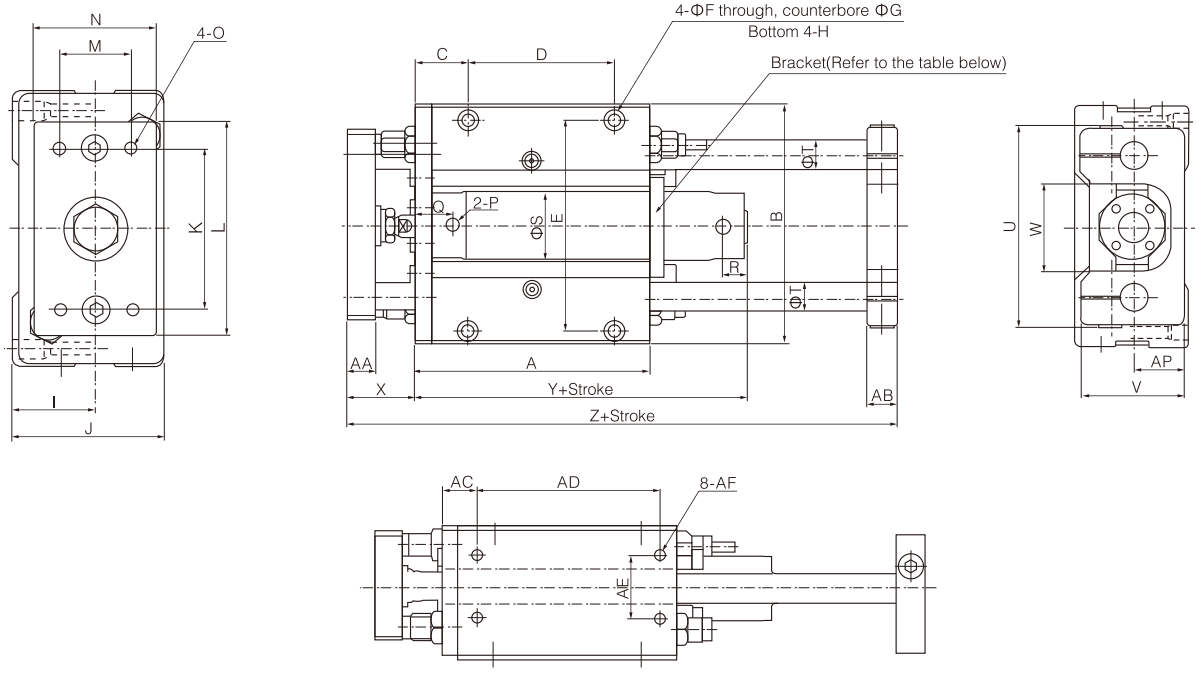


**Flange type** NMGG□F Φ20~Φ50

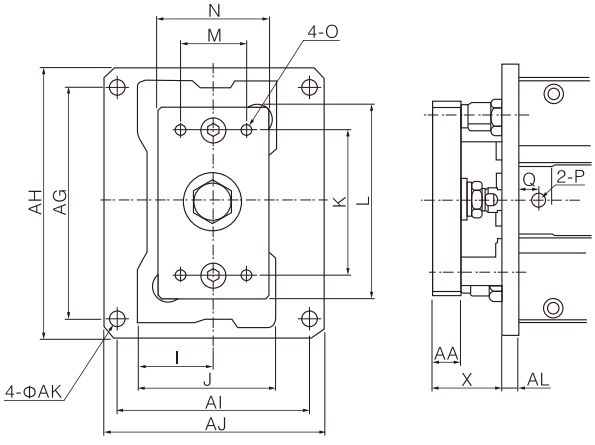


| Bore size (mm) | Flange type | | | | | | | |
|---|---|---|---|---|---|---|---|---|
| | Q | X | AG | AH | AI | AJ | AK | AL |
| 20 | 21 | 30 | 112 | 125 | 82 | 95 | 6.6 | 9 |
| 25 | 21 | 37 | 134 | 150 | 92 | 108 | 9 | 9 |
| 32 | 21 | 37 | 134 | 150 | 102 | 118 | 9 | 9 |
| 40 | 25 | 44 | 170 | 186 | 134 | 150 | 9 | 12 |
| 50 | 26 | 55 | 190 | 210 | 140 | 160 | 11 | 12 |

| Bore size (mm) | Stroke range (mm) | A | AA | AB | AC | AD | AE | AF | AP | B | C | D | E | F | G | H | I | J | K | L | M | N |
|---|---|---|---|---|---|---|---|---|---|---|---|---|---|---|---|---|---|---|---|---|---|---|
| 20 | 75,100,125,150,200 | 99 | 12 | 11 | 16.5 | 75 | 30 | M5×0.8 depth 10 | 25 | 108 | 24 | 60 | 92 | 5.5 | 9.5 depth 6 | M8×1.25 depth 14 | 30 | 55 | 60 | 80 | 25 | 45 |
| 25 | 75,100,125, 150,200,250 300 | 109 | 16 | 13 | 16.5 | 85 | 30 | M6×1 depth 12 | 30 | 130 | 26.5 | 65 | 113 | 6.6 | 11 depth 8 | M10×1.5 depth 18 | 35 | 65 | 70 | 100 | 35 | 54 |
| 32 | | 129 | 16 | 16 | 19 | 100 | 35 | M6×1 depth 12 | 35 | 135 | 29 | 80 | 118 | 6.6 | 11 depth 8 | M10×1.5 depth 18 | 40 | 73 | 80 | 106 | 35 | 60 |
| 40 | | 152 | 19 | 19 | 22 | 120 | 40 | M8×1.25 depth 16 | 45 | 170 | 32 | 100 | 150 | 9 | 14 depth 10 | M12×1.75 depth 21 | 50 | 93 | 95 | 134 | 50 | 75 |
| 50 | | 182 | 25 | 21 | 22 | 150 | 45 | M10×1.5 depth 20 | 50 | 194 | 37 | 120 | 170 | 11 | 17 depth 12 | M14×2 depth 25 | 55 | 103 | 115 | 152 | 56 | 90 |

| Bore size (mm) | O | P | Q | R | S | T | U | V | W | X | Y | Z |
|---|---|---|---|---|---|---|---|---|---|---|---|---|
| 20 | M6×1 depth 9 | 1/8" | 21 | 12 | 26 | 12 | 82 | 48 | 40 | 30 | 80 | 157 |
| 25 | M6×1 depth 13 | 1/8" | 21 | 12 | 31 | 13 | 100 | 57 | 46 | 37 | 80 | 175 |
| 32 | M6×1 depth 13 | 1/8" | 21 | 12 | 38 | 16 | 114 | 65 | 52 | 37 | 82 | 201 |
| 40 | M8×1.25 depth 16 | 1/8" | 25 | 12 | 47 | 20 | 138 | 84 | 62 | 44 | 92 | 238 |
| 50 | M10×1.5 depth 21 | 1/4" | 26 | 14 | 58 | 25 | 164 | 94 | 75 | 55 | 104 | 285 |

Long stroke

| Bore size (mm) | Stroke range (mm) | R | Y |
|---|---|---|---|
| 20 | 250~400 | 14 | 88 |
| 25 | 350~500 | 14 | 88 |
| 32 | 350~600 | 14 | 90 |
| 40 | 350~800 | 15 | 101 |
| 50 | 350~1000 | 16 | 116 |

Brackets are attached for more than the following journeys

| Bore size (mm) | Bracket Mounting Stroke |
|---|---|
| 20 | 100 st or more |
| 25 | 125 st or more |
| 32 | 150 st or more |
| 40 | 200 st or more |
| 50 | 250 st or more |

**Basic type** NMGG□B Φ63~Φ100

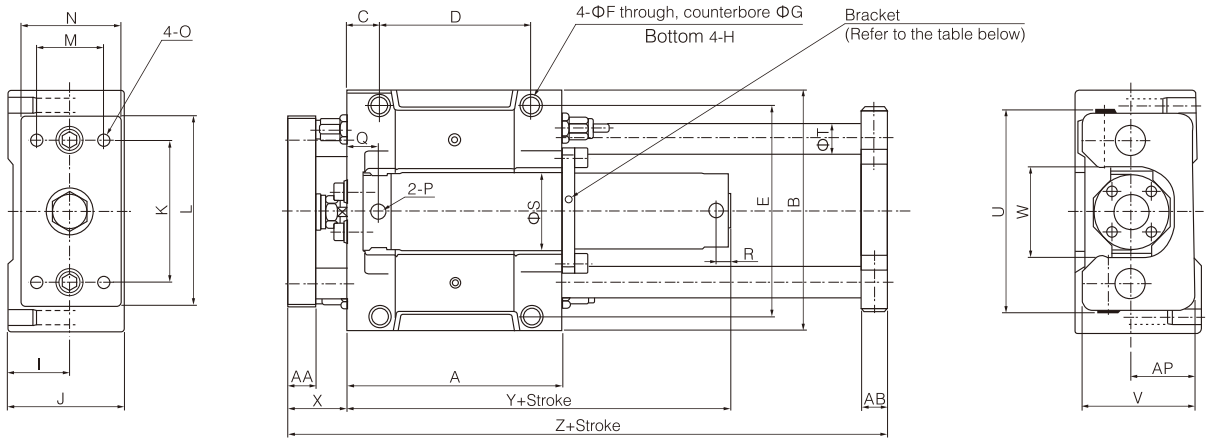


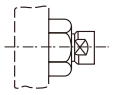

Φ100 Piston rod front end connection

| Bore size (mm) | Stroke range (mm) | A | AA | AB | AC | AD | AE | AF | AP | B | C | D | E | F | G | H | I | J | K | L | M | N |
|---|---|---|---|---|---|---|---|---|---|---|---|---|---|---|---|---|---|---|---|---|---|---|
| 63 | 75,100,125,150,200,250,300 | 200 | 25 | 25 | 15 | 170 | 50 | M12×1.75 depth 24 | 60 | 228 | 30 | 140 | 200 | 13.5 | 20 depth 14.5 | M16×2 depth 28 | 65 | 117 | 135 | 180 | 66 | 100 |
| 80 | | 230 | 30 | 27 | 15 | 200 | 55 | M12×1.75 depth 24 | 70 | 262 | 30 | 170 | 234 | 13.5 | 20 depth 14.5 | M16×2 depth 28 | 75 | 138 | 160 | 214 | 76 | 115 |
| 100 | | 280 | 32 | 30 | 17.5 | 245 | 70 | M14×2 depth 28 | 80 | 304 | 35 | 210 | 274 | 15 | 23 depth 17 | M18×2.5 depth 32 | 85 | 153 | 190 | 245 | 80 | 125 |

| Bore size (mm) | O | P | Q | R | S | T | U | V | W | X | Y | Z |
|---|---|---|---|---|---|---|---|---|---|---|---|---|
| 63 | M12×1.75 depth 23 | 1/4" | 29 | 14 | 72 | 30 | 192 | 108 | 86 | 54 | 107 | 308 |
| 80 | M12×1.75 depth 28 | 3/8" | 40 | 19 | 89 | 35 | 224 | 128 | 104 | 66 | 131 | 355 |
| 100 | M14×2 depth 30 | 1/2" | 40 | 19 | 110 | 40 | 262 | 143 | 128 | 66 | 131 | 410 |

Long stroke

| Bore size (mm) | Stroke range (mm) | R | Y |
|---|---|---|---|
| 63 | 350~1100 | 16 | 119 |
| 80 | 350~1200 | 23 | 145 |
| 100 | 350~1300 | 23 | 145 |

With bracket stroke

| Bore size (mm) | Bracket Mounting Stroke |
|---|---|
| 63 | 300 st or more |
| 80 | 400 st or more |
| 100 | 500 st or more |

**Front mounting flange type** NMGG□F Φ63~Φ100

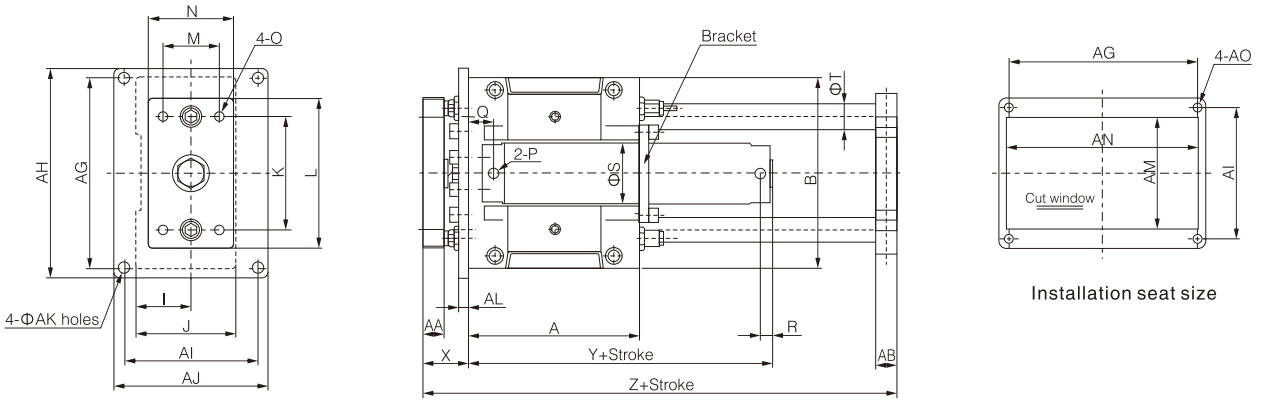


Installation seat size

| Bore size(mm) | AL | AH | AG | AI | AJ | AK | AM | AN | AO |
|---|---|---|---|---|---|---|---|---|---|
| 63 | 12 | 250 | 228 | 158 | 180 | 14 | 135 | 234 | M12 |
| 80 | 16 | 284 | 262 | 178 | 200 | 14 | 155 | 268 | M12 |
| 100 | 16 | 326 | 300 | 200 | 226 | 16 | 175 | 310 | M14 |

* Unmarked dimensions same as table above


## Specifications

| Bore size(mm) | | | 6 | 10 | 16 | 20 | 25 | 32 |
|---|---|---|---|---|---|---|---|---|
| Fluid | | | Air (to be filtered by 40μm filter element) | | | | | |
| Action | | | Double acting<br>Single action: spring return, spring extend | | | | | |
| Maximum operating pressure | | | 0.7MPa | | | | | |
| Minimum operating pressure (MPa) | Double acting | Single rod | 0.12 | 0.06 | 0.05 | | | |
| | | Double rod, non-rotating rod, air cushioning | 0.15 | 0.10 | 0.08 | | | |
| | | Non-rotating rod, double rod | 0.18 | 0.13 | 0.11 | | | |
| | Single acting | Standard | 0.20 | 0.15 | 0.13 | | | |
| | | Non-rotating rod type | 0.23 | 0.18 | 0.16 | | | |
| Ambient and fluid temperature | | | Magnetic switch: -10-60℃, non-magnetic switch: -10-70℃ | | | | | |
| Cushion | | | Rubber cushion at both ends | | | | | |
| Piston speed (mm/s) | | | 50~500 | | | | | |
| Stroke length tolerance (mm) | | | $^{+1.0}_{0}$ | | | | | |
| Lubrication Note) | | | Not required (Non-lube) | | | | | |
| Installation form | | | Free (multifaceted installation) | | | | | |
| Non-rotation accuracy of piston rod | | | ±0.8° | | | ±0.5° | | |
| Port size | | | M5×0.8 | | | | | 1/8" |

Note: If lubrication is required, please use turbine No.1 oil ISO VG32.

## Symbol

Double acting

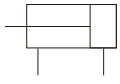

Non-rotating rod type

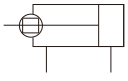

Spring return

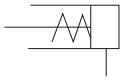

Spring extend

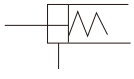

## Ordering code

**N C D U K 6 □ – 30 D – M9N □**

**Built in magnetic ring**

| | |
|---|---|
| Blank | No built-in magnetic ring |
| D | Built in magnetic ring |

**Mounting type**

| | |
|---|---|
| Blank | Basic type |
| K | Non-rotating rod |
| W | Double rod |
| KW | Non-rotating rod, double rod |

* Single acting cylinder and long stroke double acting cylinder have no W and KW types.

**Bore size**

| | |
|---|---|
| 6 | 6mm |
| 10 | 10mm |
| 16 | 16mm |
| 20 | 20mm |
| 25 | 25mm |
| 32 | 32mm |

**Stroke**

Refer to stroke table for details

**Action**

| | |
|---|---|
| D | Double acting |
| S | Single action (Spring return) |
| T | Single action (Spring extend) |

**Number of magnetic switches**

| | |
|---|---|
| Blank | 2 pcs. |
| S | 1 pc. |
| n | "n" pcs. |

**Port thread type**

| Mark | type | Bore size |
|---|---|---|
| Blank | M thread | Φ6~25 |
| | Rc | Φ32 |
| TN | NPT | |
| TF | G | |

**Magnetic switch type**

| | |
|---|---|
| Blank | Without magnetic switch |

* Magnetic switch type refer stroke /Magnetic switch model table

## Stroke/magnetic switch model table

| Bore size (mm) | Standard stroke | | Long stroke (Double acting) | Magnetic switch model (Direct mounting) Note) |
|---|---|---|---|---|
| | Double acting | Single action | | |
| 6 | 5,10,15, 20,25,30 | 5,10,15 | 40<br>50<br>60 | M9N<br>M9B<br>M9P |
| 10 | | | | |
| 16 | | | | |
| 20 | 5,10,15, 20,25,30, 40,50 | | 60,70<br>80,90<br>100 | |
| 25 | | | | |
| 32 | | | | |

Note: The specifications and characteristics of magnetic switches can be referred to the series of magnetic switches.
Wire length representation mark: no mark-0.5m, L-3m, Z-5m,
Example: M9N, M9NL.

## Adaptive installation / rectangular cylinder

| Mounting Type | Axial mounting (Body tapped) | Vertical mounting (Body through-holes) | Lateral mounting (Body through-holes) |
|---|---|---|---|
| | 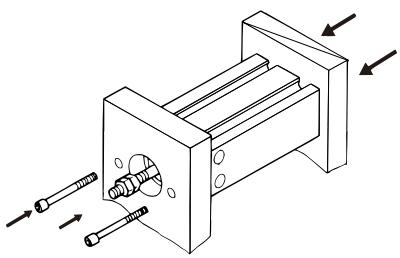 | 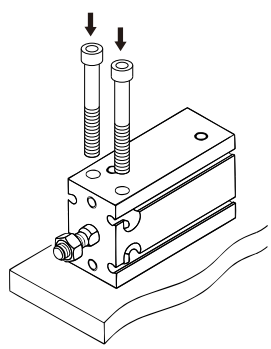 | 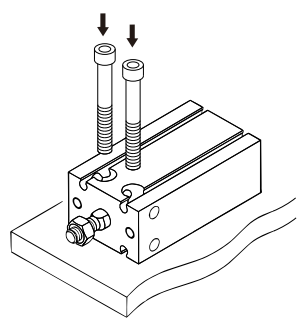 |

## Dimensions

Basic type, built-in magnetic ring type (double-acting, single-acting spring return/extend)

**Φ6, Φ10**

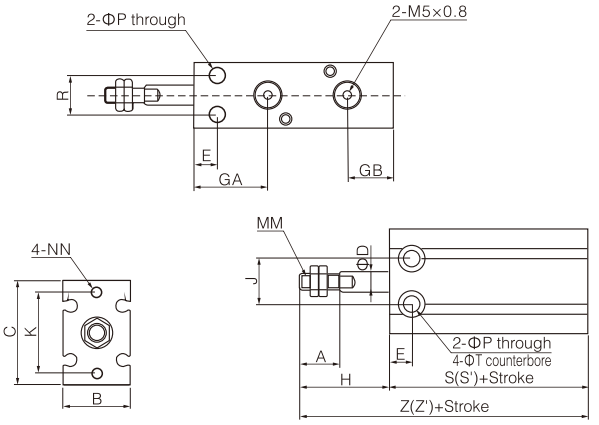


**Φ16~Φ25**

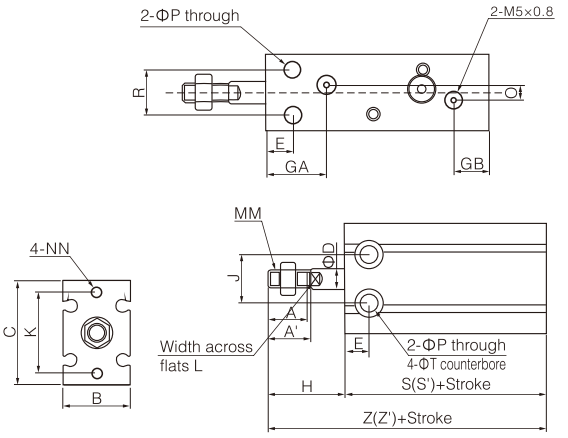


**Φ32**

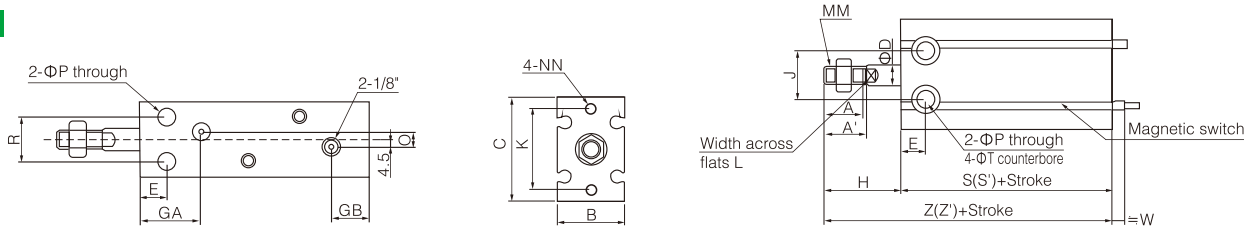


### Common dimension table

| Model | A | A' | B | C | ΦD | E | GA | GB | J | K | L | MM | NN | ΦP | Q | R | ΦT |
|---|---|---|---|---|---|---|---|---|---|---|---|---|---|---|---|---|---|
| NC□U6 | 7 | - | 13 | 22 | 3 | 7 | 15 | 10 | 10 | 17 | - | M3×0.5 | M3×0.5 depth 5 | 3.2 | - | 7 | 6 depth 4.8 |
| NC□U10 | 10 | - | 15 | 24 | 4 | 7 | 16.5 | 10 | 11 | 18 | - | M4×0.7 | M3×0.5 depth 5 | 3.2 | - | 9 | 6 depth 5 |
| NC□U16 | 11 | 12.5 | 20 | 32 | 6 | 7 | 16.5 | 11.5 | 14 | 25 | 5 | M5×0.8 | M4×0.7 depth 6 | 4.5 | 4 | 12 | 7.6 depth 6.5 |
| NC□U20 | 12 | 14 | 26 | 40 | 8 | 9 | 19 | 12.5 | 16 | 30 | 6 | M6×1.0 | M5×0.8 depth 8 | 5.5 | 9 | 16 | 9.3 depth 8 |
| NC□U25 | 15.5 | 18 | 32 | 50 | 10 | 10 | 21.5 | 13 | 20 | 38 | 8 | M8×1.25 | M5×0.8 depth 8 | 5.5 | 9 | 20 | 9.3 depth 9 |
| NC□U32 | 19.5 | 22 | 40 | 62 | 12 | 11 | 23 | 13 | 24 | 48 | 10 | M10×1.25 | M6×1.0 depth 9 | 6.6 | 13.5 | 24 | 11 depth 11.5 |

### Double acting dimension table

| Model | H | Basic type | | Built-in magnetic ring type | | |
|---|---|---|---|---|---|---|
| | | S | Z | W | S' | Z' |
| NC□U6-□D | 13 | 33 | 46 | 2.5 | 33 | 46 |
| NC□U10-□D | 16 | 36 | 52 | 1 | 36 | 52 |
| NC□U16-□D | 16 | 30 | 46 | 0 | 40 | 56 |
| NC□U20-□D | 19 | 36 | 55 | 1 | 46 | 65 |
| NC□U25-□D | 23 | 40 | 63 | -1 | 50 | 73 |
| NC□U32-□D | 27 | 42 | 69 | -4 | 52 | 79 |

### Single action (Spring return) dimension table

*St+Stroke

| Model | H | Basic type | | | | | | Built-in magnetic ring type | | | | | | |
|---|---|---|---|---|---|---|---|---|---|---|---|---|---|---|
| | | S | | | Z | | | W | S' | | | Z' | | |
| | | 5st | 10st | 15st | 5st | 10st | 15st | | 5st | 10st | 15st | 5st | 10st | 15st |
| NC□U6-□S | 13 | 38 | 43 | 48 | 51 | 56 | 61 | 2.5 | 38 | 43 | 48 | 51 | 56 | 61 |
| NC□U10-□S | 16 | 41 | 46 | 56 | 57 | 62 | 72 | 1 | 41 | 46 | 56 | 57 | 62 | 72 |
| NC□U16-□S | 16 | 35 | 40 | 50 | 51 | 56 | 66 | 0 | 45 | 50 | 60 | 61 | 66 | 76 |
| NC□U20-□S | 19 | 41 | 46 | 56 | 60 | 65 | 75 | 1 | 51 | 56 | 66 | 70 | 75 | 85 |
| NC□U25-□S | 23 | 45 | 50 | 60 | 68 | 73 | 83 | -1 | 55 | 60 | 70 | 78 | 83 | 93 |
| NC□U32-□S | 27 | 47 | 52 | 62 | 74 | 79 | 89 | -4 | 57 | 62 | 72 | 84 | 89 | 99 |

### Single action (spring extend) dimension table

*St+Stroke

| Model | H | | | Basic type | | | | | | Built-in magnetic ring type | | | | | | |
|---|---|---|---|---|---|---|---|---|---|---|---|---|---|---|---|---|
| | | | | S | | | Z | | | W | S' | | | Z' | | |
| | 5st | 10st | 15st | 5st | 10st | 15st | 5st | 10st | 15st | | 5st | 10st | 15st | 5st | 10st | 15st |
| NC□U6-□T | 18 | 23 | 28 | 38 | 43 | 48 | 56 | 66 | 76 | 2.5 | 38 | 43 | 48 | 56 | 66 | 76 |
| NC□U10-□T | 21 | 26 | 31 | 41 | 46 | 56 | 62 | 72 | 87 | 1 | 41 | 46 | 56 | 62 | 72 | 87 |
| NC□U16-□T | 21 | 26 | 31 | 45 | 50 | 60 | 66 | 76 | 91 | 0 | 45 | 50 | 60 | 66 | 76 | 91 |
| NC□U20-□T | 24 | 29 | 34 | 41 | 46 | 56 | 65 | 75 | 90 | 1 | 51 | 56 | 66 | 75 | 85 | 100 |
| NC□U25-□T | 28 | 33 | 38 | 45 | 50 | 60 | 73 | 83 | 98 | -1 | 55 | 60 | 70 | 83 | 93 | 108 |
| NC□U32-□T | 32 | 37 | 42 | 47 | 52 | 62 | 79 | 89 | 104 | -4 | 57 | 62 | 72 | 89 | 99 | 114 |

Non-rotating rod type, built-in magnetic ring type (double-acting, single-acting spring return/extend)

**Φ6, Φ10**

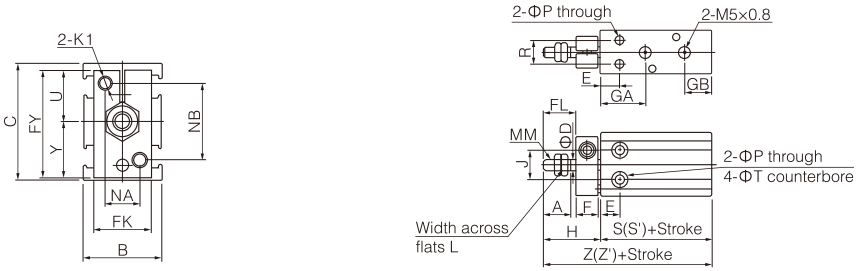


**Φ16~Φ25**

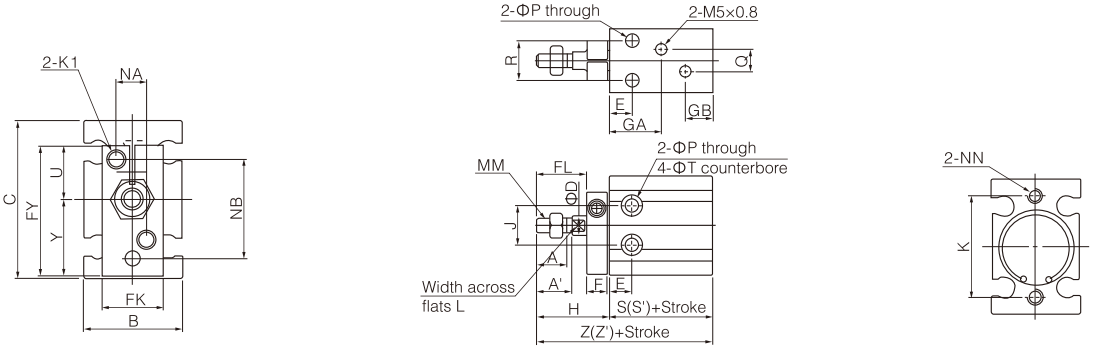


**Φ32**

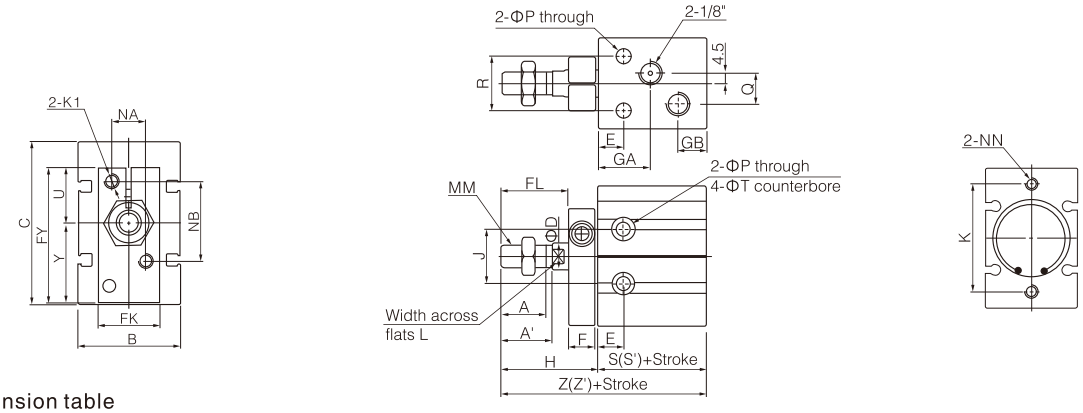


## Common dimension table

| Model | A | A' | B | C | ΦD | E | F | FL | FK | FY | GA | GB | H | J | K | L | MM | NA | NB | NN | ΦP | Q | R | ΦT | U | Y |
|---|---|---|---|---|---|---|---|---|---|---|---|---|---|---|---|---|---|---|---|---|---|---|---|---|---|---|
| NC□UK6 | 7 | - | 13 | 22 | 3 | 7 | 8 | 9 | 11 | 20.5 | 15 | 10 | 18 | 10 | 17 | - | M3×0.5 | 6 | 14 | M3×0.5 depth 5 | 3.4 | - | 7 | 6 depth 4.8 | 10 | 10.5 |
| NC□UK10 | 10 | - | 15 | 24 | 4 | 7 | 8 | 12 | 12 | 22 | 16.5 | 10 | 21 | 11 | 18 | - | M4×0.7 | 7 | 15 | M3×0.5 depth 5 | 3.4 | - | 9 | 6 depth 5 | 10.5 | 11.5 |
| NC□UK16 | 11 | 12.5 | 20 | 32 | 6 | 7 | 8 | 17 | 13 | 28 | 16.5 | 11.5 | 26 | 14 | 25 | 5 | M5×0.8 | 6 | 18 | M4×0.7 depth 6 | 4.5 | 4 | 12 | 7.6 depth 6.5 | 12.5 | 15.5 |
| NC□UK20 | 12 | 14 | 26 | 40 | 8 | 9 | 8 | 20 | 16 | 33 | 19 | 12.5 | 29 | 16 | 30 | 6 | M6×1.0 | 8 | 20 | M5×0.8 depth 8 | 5.5 | 9 | 16 | 9.3 depth 8 | 13.5 | 19.5 |
| NC□UK25 | 15.5 | 18 | 32 | 50 | 10 | 10 | 10 | 22 | 20 | 43.5 | 21.5 | 13 | 33 | 20 | 38 | 8 | M8×1.25 | 10 | 28 | M5×0.8 depth 8 | 5.5 | 9 | 20 | 9.3 depth 9 | 19 | 24.5 |
| NC□UK32 | 19.5 | 22 | 40 | 62 | 12 | 11 | 12 | 29 | 24 | 51.5 | 23 | 12.5 | 42 | 24 | 48 | 10 | M10×1.25 | 12 | 32 | M6×1.0 depth 9 | 6.6 | 13.5 | 24 | 11 depth 11.5 | 21 | 30.5 |

## Double acting dimension table

| Model | H | Without magnetic ring | | Built-in magnetic ring type | | |
|---|---|---|---|---|---|---|
| | | S | Z | W | S' | Z' |
| NC□UK6-□D | 18 | 33 | 51 | 2.5 | 33 | 51 |
| NC□UK10-□D | 21 | 36 | 57 | 1 | 36 | 57 |
| NC□UK16-□D | 26 | 30 | 56 | 0 | 40 | 66 |
| NC□UK20-□D | 29 | 36 | 65 | 1 | 46 | 75 |
| NC□UK25-□D | 33 | 40 | 73 | -1 | 50 | 83 |
| NC□UK32-□D | 42 | 42 | 84 | -4 | 52 | 94 |

## Single action (Spring return) dimension table

*St=Stroke

| Model | H | Without magnetic ring | | | | | | Built-in magnetic ring type | | | | | | | | |
|---|---|---|---|---|---|---|---|---|---|---|---|---|---|---|---|---|
| | | S | | | Z | | | W | S' | | | Z' | | |
| | | 5st | 10st | 15st | 5st | 10st | 15st | | 5st | 10st | 15st | 5st | 10st | 15st |
| NC□UK6-□S | 18 | 38 | 43 | 48 | 56 | 61 | 66 | 2.5 | 38 | 43 | 48 | 56 | 61 | 66 |
| NC□UK10-□S | 21 | 41 | 46 | 56 | 62 | 67 | 77 | 1 | 41 | 46 | 56 | 62 | 67 | 77 |
| NC□UK16-□S | 26 | 35 | 40 | 50 | 61 | 66 | 76 | 0 | 45 | 50 | 60 | 71 | 76 | 86 |
| NC□UK20-□S | 29 | 41 | 46 | 56 | 70 | 75 | 85 | 1 | 51 | 56 | 66 | 80 | 85 | 95 |
| NC□UK25-□S | 33 | 45 | 50 | 60 | 78 | 83 | 93 | -1 | 55 | 60 | 70 | 88 | 93 | 103 |
| NC□UK32-□S | 42 | 47 | 52 | 62 | 89 | 94 | 104 | -4 | 57 | 62 | 72 | 99 | 104 | 114 |

## Single action (spring extend) dimension table

*St=Stroke

| Model | H | | | ΦT | U | Y | Without magnetic ring | | | | | | Built-in magnetic ring type | | | | | | | |
|---|---|---|---|---|---|---|---|---|---|---|---|---|---|---|---|---|---|---|---|---|
| | | | | | | | S | | | Z | | | W | S' | | | Z' | | |
| | 5st | 10st | 15st | | | | 5st | 10st | 15st | 5st | 10st | 15st | | 5st | 10st | 15st | 5st | 10st | 15st |
| NC□UK6-□T | 23 | 28 | 33 | 6 depth 4.8 | 10 | 10.5 | 38 | 43 | 48 | 61 | 71 | 81 | 2.5 | 38 | 43 | 48 | 61 | 71 | 81 |
| NC□UK10-□T | 26 | 31 | 36 | 6 depth 5 | 10.5 | 11.5 | 41 | 46 | 56 | 67 | 77 | 92 | 1 | 41 | 46 | 56 | 67 | 77 | 92 |
| NC□UK16-□T | 31 | 36 | 41 | 7.6 depth 6.5 | 12.5 | 15.5 | 45 | 50 | 60 | 76 | 86 | 101 | 0 | 45 | 50 | 60 | 76 | 86 | 101 |
| NC□UK20-□T | 34 | 39 | 44 | 9.5 depth 8 | 13.5 | 19.5 | 41 | 46 | 56 | 75 | 85 | 100 | 1 | 51 | 56 | 66 | 85 | 95 | 110 |
| NC□UK25-□T | 38 | 43 | 48 | 9.5 depth 9 | 19 | 24.5 | 45 | 50 | 60 | 83 | 93 | 108 | -1 | 55 | 60 | 70 | 93 | 103 | 118 |
| NC□UK32-□T | 47 | 52 | 57 | 11 depth 11.5 | 21 | 30.5 | 47 | 52 | 62 | 94 | 104 | 119 | -4 | 57 | 62 | 72 | 104 | 114 | 129 |


## Specifications

| Bore size(mm) | | 4 | 6 | 8 | 10 |
|---|---|---|---|---|---|
| Fluid | | Air (to be filtered by 40μm filter element) | | | |
| Action | | Double acting/Single action:(spring return) | | | |
| Maximum operating pressure | | 0.7MPa | | | |
| Minimum operating pressure (MPa) | Double acting | 0.15 | | | 0.1 |
| | Single acting | 0.35 | 0.3 | | 0.2 |
| Ambient and fluid temperature | | With magnetic switch: -10-60℃, Without magnetic switch: -10-70℃ | | | |
| Cushion | | None | | | |
| Piston speed (mm/s) | | 50~500 | | | |
| Stroke length tolerance (mm) | | $^{+0.5}_{0}$ | | | |
| Lubrication Note) | | Not required (Non-lube) | | | |
| Installation form | | Through-hole, free (multi-faceted) installation | | | |
| Port size | | M3×0.5 | | | |

Note: If lubrication is required, please use turbine No.1 oil ISO VG32.

## Symbol

Double acting

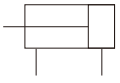

Single acting: Spring return

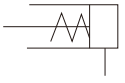

## Ordering code

Basic type: **NCUJ B 4 – 6 S □**

Built-in magnetic ring: **NCDUJ B 8 – 10 D M – M9N S**

**With magnetic switch**

| | |
|---|---|
| | Built in magnetic ring |

**Mounting type**

| | |
|---|---|
| B | Basic (Through-hole) |

**Bore size**

| | |
|---|---|
| 4 | 4mm |
| 6 | 6mm |
| 8 | 8mm |
| 10 | 40mm |

*Φ4mm cylinder has no built-in magnetic ring.

**Stroke**

**Action**

| | |
|---|---|
| D | Double acting |
| S | Single action (Spring return) |

**Rod end thread**

| | |
|---|---|
| Blank | Rod end female threaded (Without thread for Φ4) |
| M | Rod end male threaded |

**Magnetic switch type**

| | |
|---|---|
| Blank | Without magnetic switch |

*Magnetic switch type refer stroke/Magnetic switch model table

**Number of magnetic switches**

| | |
|---|---|
| Blank | 2 pcs. |
| S | 1 pc. |
| n | "n" pcs. |

## Stroke/magnetic switch model table

| Bore size (mm) | Standard stroke | | Magnetic switch model (Track installation) Note) |
|---|---|---|---|
| | Double acting | Single action | |
| 4 | 4, 6, 8, 10, 15, 20 | 4, 6 | M9N M9B M9P |
| 6 | 4, 6, 8, 10, 15 20, 25, 30 | 4, 6, 8 | |
| 8 | 4, 6, 8, 10, 15 20, 25, 30 | 4, 6, 8, 10 | |
| 10 | | | |

Note: The specifications and characteristics of magnetic switches can be referred to the series of magnetic switches.
Wire length representation mark: no mark-0.5m, L-3m, Z-5m.

## Mini free mount cylinder

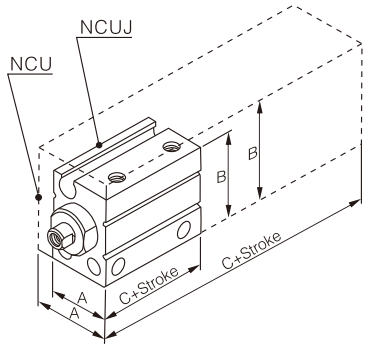


Full length: maximum reduction of about 64%.
Volume: Maximum reduction of about 70%.
(Comparing with NCU series)

Smaller size
Minimum diameter of cylinder Φ4 mm

| Bore size(mm) | A | B | C |
|---|---|---|---|
| 4 | 10 | 15 | 13 |
| 6 | 13(13) | 19(22) | 13(33) |
| 8 | 13 | 21 | 13 |
| 10 | 13.5(15) | 22(24) | 13(36) |

( ): The size of NCU Series in brackets

Spacing shorten
(Easy to use side by side)

| Bore size(mm) | E |
|---|---|
| 4 | 10 |
| 6 | 13 |
| 8 | 13 |
| 10 | 13.5 |

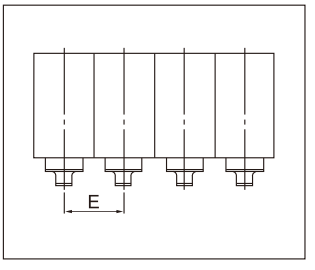


With boss (h9)
(Easy to align)

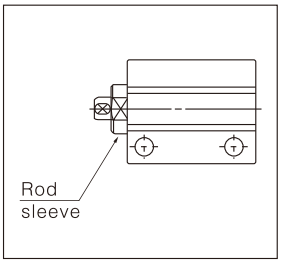


4 sides can be installed
(Easy to install)

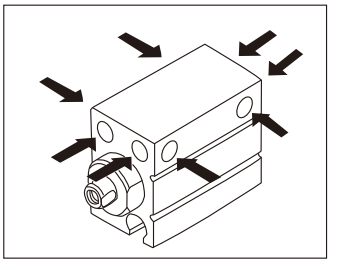

## Dimensions

**NCUJB4**

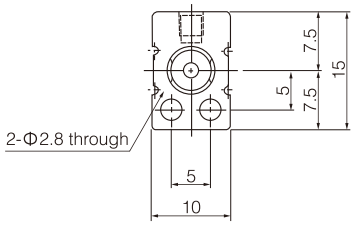


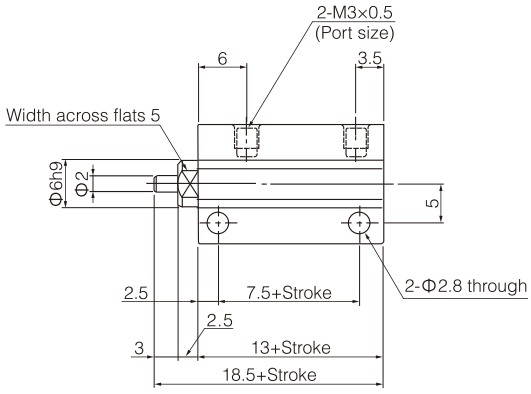


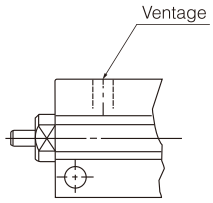


Single acting, spring return

Rod end male threaded

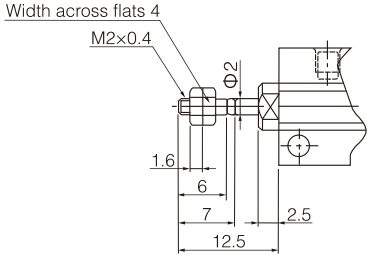


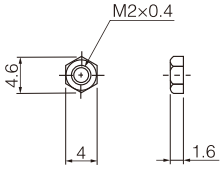


Rod end nut part no. : NTJ-004

**NCUJB6・NCDUJB6**

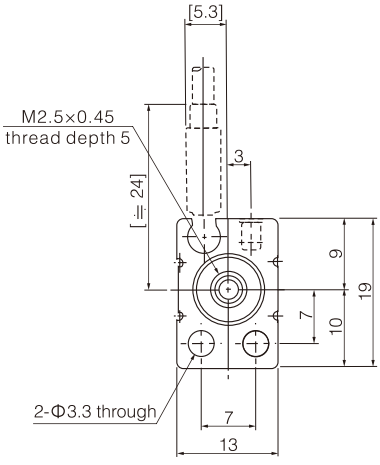


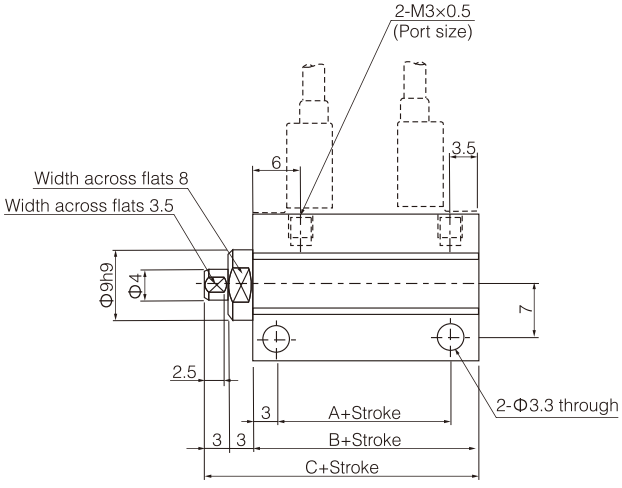


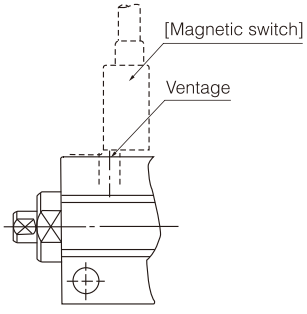


Single acting, spring return

Rod end male threaded

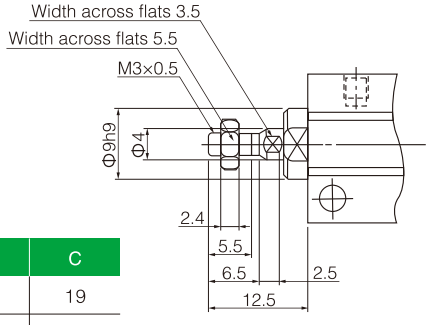


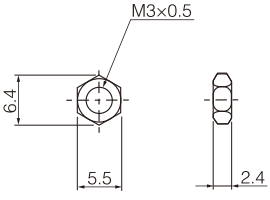


Rod end nut part no. : NTJ-006A

| Model | A | B | C |
|---|---|---|---|
| NCUJB6 | 6.5 | 13 | 19 |
| NCDUJB6 | 11.5 | 18 | 24 |

## NCUJB8・NCDUJB8

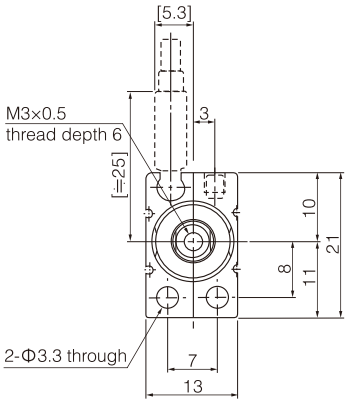


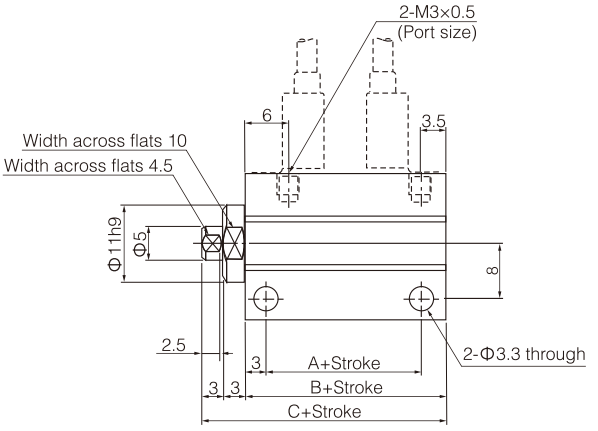


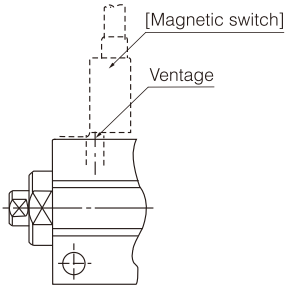


Single acting, spring return

Rod end male threaded

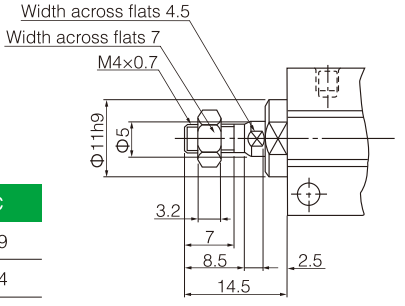


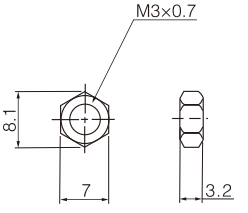


Rod end nut part no. : NTJ-010A

| Model | A | B | C |
|---|---|---|---|
| NCUJB8 | 6.5 | 13 | 19 |
| NCDUJB8 | 11.5 | 18 | 24 |

## NCUJB10・NCDUJB10

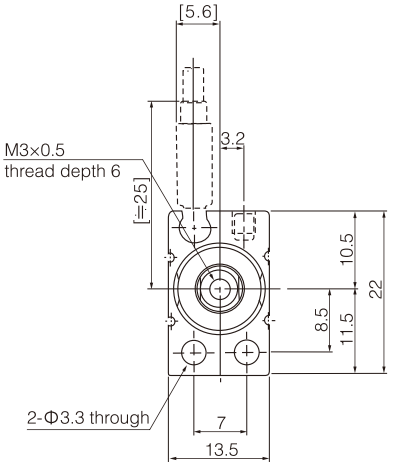


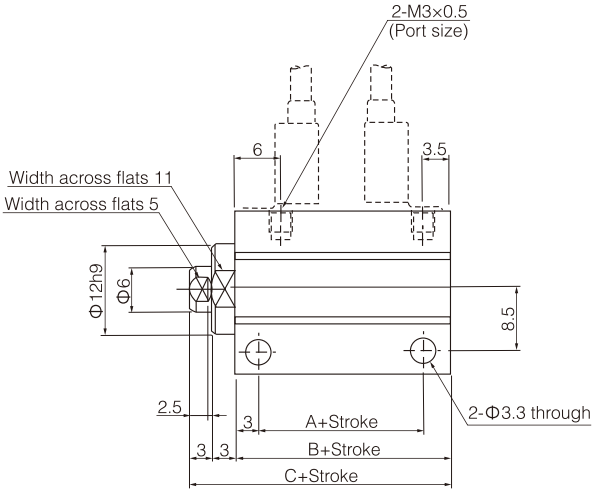


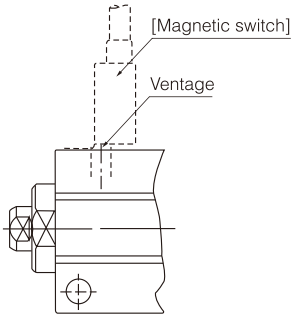


Single acting, spring return

Rod end male threaded

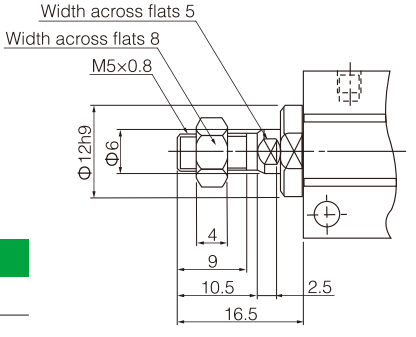


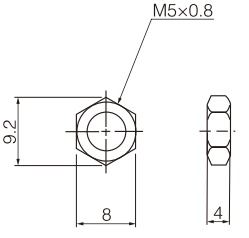


Rod end nut part no. : NTJ-015A

| Model | A | B | C |
|---|---|---|---|
| NCUJB10 | 6.5 | 13 | 19 |
| NCDUJB10 | 11.5 | 18 | 24 |

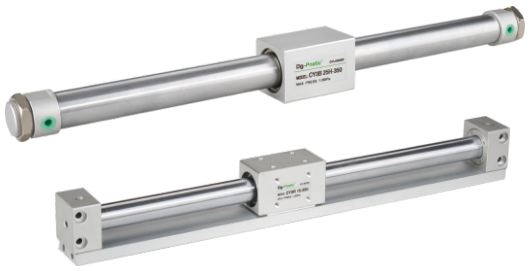

1. The wear-resistant ring increases by 70% compared with NCY1B series, so the bearing capacity of the shaft is improved.
2. Special resin wear ring is used to improve lubrication performance and durability.
3. Use special dust-proof ring, minimum use pressure reduced by 30%.
4. Installation size is the same as NCY1B/R series.

## Specifications

| Bore size(mm) | 6 | 10 | 15 | 20 | 25 | 32 | 40 | 50 | 63 |
|---|---|---|---|---|---|---|---|---|---|
| Fluid | Air (to be filtered by 40μm filter element) | | | | | | | | |
| Action | Double acting | | | | | | | | |
| Maximum operating pressure | 0.7MPa | | | | | | | | |
| Minimum operating pressure (MPa) | 0.16 | | | | 0.15 | 0.14 | 0.12 | | |
| Ambient and fluid temperature | -10~60℃ (No freezing) | | | | | | | | |
| Cushion | Rubber bumper | | | | | | | | |
| Lubrication | Not required (Non-lube) | | | | | | | | |
| Piston speed (mm/s) | 50~500 | | | | | | | | |
| Stroke length tolerance (mm) | $0\sim250^{+1.0}_{0}$, $251\sim1000^{+1.4}_{0}$, $1001\sim^{+1.8}_{0}$ | | | | | | | | |
| Magnet holding force (N) | 19.6 | 53.9 | 137 | 231 | 363 | 588 | 922 | 1471 | 2256 |
| Port size | M5×0.8 | | | | 1/8" | | 1/4" | | |

## Symbol

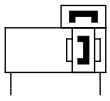

## Ordering code

Basic type: **NCY3B 25 □ – 300 □**

Direct mount type: **NCY3R □ 25 □ – 300 □ – M9B S**

**Piping type**

| | |
|---|---|
| Blank | Standard type |
| G | Centralized piping type |

* Type G (centralized piping) is not available for Φ6.

**Bore size**

| | | | |
|---|---|---|---|
| 6 | 6mm | 32 | 32mm |
| 10 | 10mm | 40 | 40mm |
| 15 | 15mm | 50 | 50mm |
| 20 | 20mm | 63 | 63mm |
| 25 | 25mm | | |

**Port thread type**

| Mark | type | Bore size |
|---|---|---|
| Blank | M | 6,10,15 |
| | Rc | 20,25,32, 40,50,63 |
| TN | NPT | |
| TF | G | |

**Switch rail**

| | |
|---|---|
| Blank | With switch rail |
| N | Without switch rail |

* A magnet is built into the switch rail.

**Stroke**

**Magnetic switch type**

| | |
|---|---|
| Blank | Without magnetic switch |

*Magnetic switch type refer stroke/Magnetic switch model table

**Number of magnetic switches**

| | |
|---|---|
| Blank | 2 pcs. |
| S | 1 pc. |
| n | "n" pcs. |

## Stroke/magnetic switch model table

| Bore size (mm) | Standard stroke | Max. stroke | | Magnetic switch model |
|---|---|---|---|---|
| | | Without switch | With switch | |
| 6 | 50, 100, 150, 200 | 300 | 300 | M9N M9B M9P |
| 10 | 50, 100, 150, 200, 250, 300 | 500 | 500 | |
| 15 | 50,100,150,200,250,300,350,400,450,500 | 1000 | 7500 | |
| 20 | 50, 100, 150, 200, 250, 300, 350 400, 450, 500, 600, 700, 800 | 1500 | 1000 | |
| 25 | | 1500 | 1200 | |
| 32 | | 2000 | 1500 | |
| 40 | 50, 100, 150, 200, 250, 300, 350 400, 450, 500, 600, 700, 800 900, 1000 | 2000 | 1500 | |
| 50 | | 2000 | 1500 | |
| 63 | | 2000 | 1500 | |

Note: The specifications and characteristics of magnetic switches can be referred to the series of magnetic switches.
Wire length representation mark: no mark-0.5m, L-3m, Z-5m.

## Dimensions

**NCY3BΦ6~Φ63**

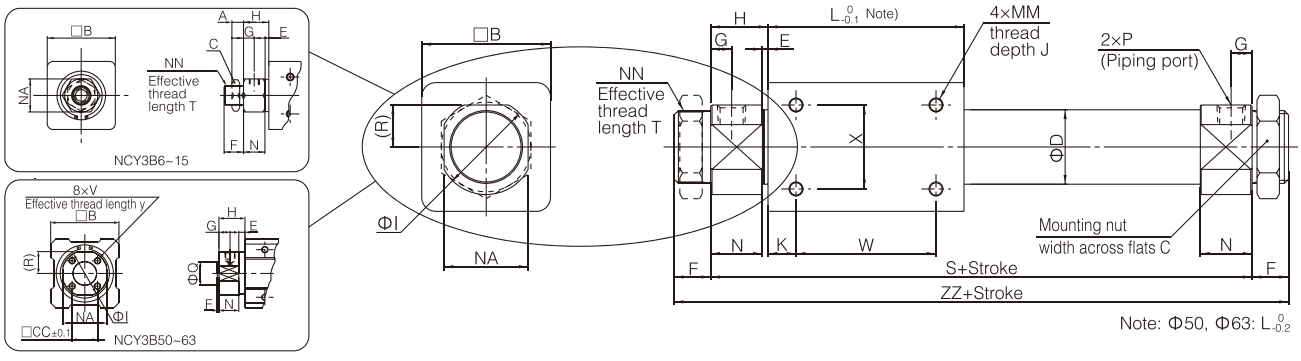


| Model | A | B | C | CC | D | E | F | G | H | I | J | K | L | MM | N | NA | NN | Q | R | S | T | V | W | X | Y | ZZ | P (Piping port) | | |
|---|---|---|---|---|---|---|---|---|---|---|---|---|---|---|---|---|---|---|---|---|---|---|---|---|---|---|---|---|---|
| | | | | | | | | | | | | | | | | | | | | | | | | | | | Blank | TN | TF |
| NCY3B6 | 4 | 17 | 8 | - | 7.6 | 4 | 8 | 5 | 13.5 | - | 4.5 | 5 | 35 | M3×0.5 | 9.5 | 10 | M6×1 | - | - | 62 | 6.5 | - | 25 | 10 | - | 78 | M3×0.5 | - | - |
| NCY3B10 | 4 | 25 | 14 | - | 12 | 1.5 | 9 | 5 | 12.5 | - | 4.5 | 4 | 38 | M3×0.5 | 11 | 14 | M10×1 | - | - | 63 | 7.5 | - | 30 | 16 | - | 81 | M5×0.8 | - | - |
| NCY3B15 | 4 | 35 | 14 | - | 16.6 | 2 | 10 | 5.5 | 13 | - | 6 | 11 | 57 | M4×0.7 | 11 | 17 | M10×1 | - | - | 83 | 8 | - | 35 | 19 | - | 103 | M5×0.8 | - | - |
| NCY3B20 | 8 | 36 | 26 | - | 21.6 | 2 | 13 | 7.5 | 20 | 28 | 6 | 8 | 66 | M4×0.7 | 18 | 24 | M20×1.5 | - | 12 | 106 | 10 | - | 50 | 25 | - | 132 | Rc1/8 | NPT1/8 | G1/8 |
| NCY3B25 | 8 | 46 | 32 | - | 26.4 | 2 | 13 | 7.5 | 20.5 | 34 | 8 | 10 | 70 | M5×0.8 | 18.5 | 30 | M26×1.5 | - | 15 | 111 | 10 | - | 50 | 30 | - | 137 | Rc1/8 | NPT1/8 | G1/8 |
| NCY3B32 | 8 | 60 | 32 | - | 33.6 | 2 | 16 | 8 | 22 | 40 | 8 | 15 | 80 | M6×1 | 20 | 36 | M26×1.5 | - | 18 | 124 | 13 | - | 50 | 40 | - | 156 | Rc1/8 | NPT1/8 | G1/8 |
| NCY3B40 | 10 | 70 | 41 | - | 41.6 | 3 | 16 | 11 | 29 | 50 | 10 | 16 | 92 | M6×1 | 26 | 46 | M32×2 | - | 23 | 150 | 13 | - | 60 | 40 | - | 182 | Rc1/4 | NPT1/4 | G1/4 |
| NCY3B50 | - | 86 | - | 32 | 52.4 | 8 | 2 | 14 | 33 | 58 | 12 | 25 | 110 | M8×1.25 | 25 | 55 | - | $30^{-0.007}_{-0.037}$ | 27.5 | 176 | - | M8×1.25 | 60 | 60 | 16 | 180 | Rc1/4 | NPT1/4 | G1/4 |
| NCY3B63 | - | 100 | - | 38 | 65.4 | 8 | 2 | 14 | 33 | 72 | 12 | 26 | 122 | M8×1.25 | 25 | 69 | - | $32^{-0.007}_{-0.043}$ | 34.5 | 188 | - | M10×1.5 | 70 | 70 | 16 | 192 | Rc1/4 | NPT1/4 | G1/4 |

**Mounting nut** Included in the package (2 pcs).

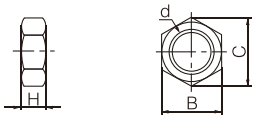


| Part No. | Applicable bore size (mm) | d | H | B | C |
|---|---|---|---|---|---|
| SNJ-006B | 6 | M6×1.0 | 4 | 8 | 9.2 |
| SNJ-016B | 10, 15 | M10×1.0 | 4 | 14 | 16.2 |
| SN-020B | 20 | M20×1.5 | 8 | 26 | 30 |
| SN-032B | 25, 32 | M26×1.5 | 8 | 32 | 37 |
| SN-040B | 40 | M32×2.0 | 10 | 41 | 47.3 |

**Both sides piping type: Φ6~Φ63**

Note: This figure shows types with switch rail (Blank).

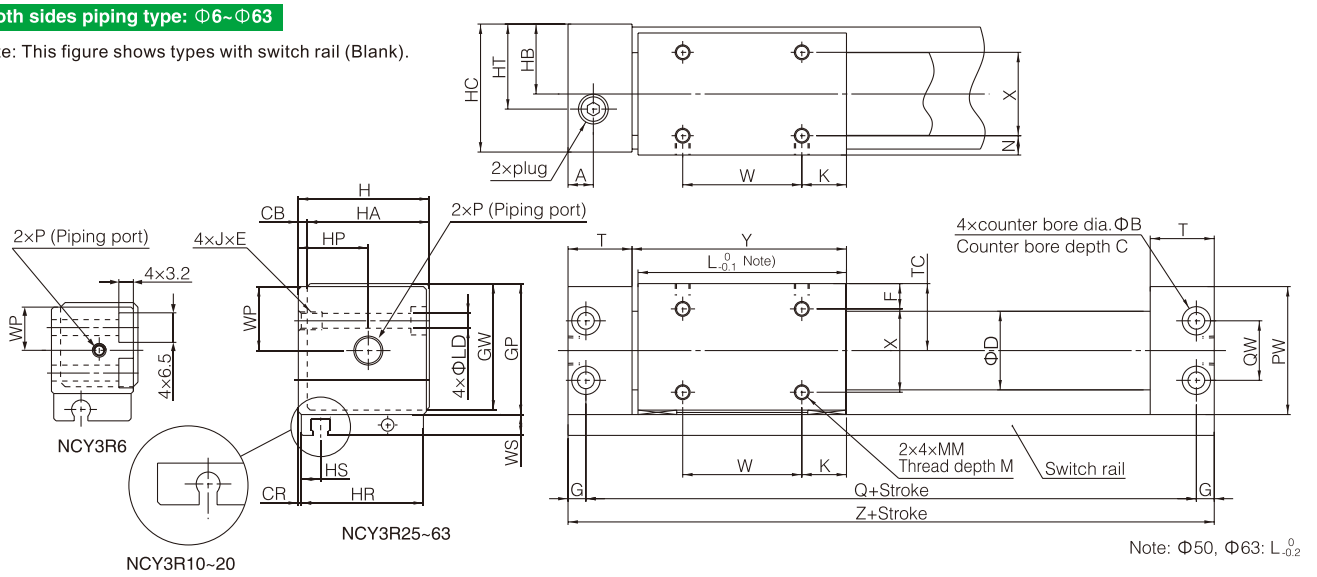


| Model | A | B | C | CB | CR | D | F | G | GP | GW | H | HA | HB | HC | HP | HR | HS | HT | J×E | K |
|---|---|---|---|---|---|---|---|---|---|---|---|---|---|---|---|---|---|---|---|---|
| NCY3R6 | 7 | - | - | 2 | 0.5 | 7.6 | 5.5 | 3 | 20 | 18.5 | 19 | 17 | 10.5 | 18 | 10.5 | 17 | 6 | 10.5 | M4×0.7×6 | 7 |
| NCY3R10 | 9 | 6.5 | 3.2 | 2 | 0.5 | 12 | 6.5 | 4 | 27 | 25.5 | 26 | 24 | 14 | 25 | 14 | 24 | 5 | 14 | M4×0.7×6 | 9 |
| NCY3R15 | 10.5 | 8 | 4.2 | 2 | 0.5 | 16.6 | 8 | 5 | 33 | 31.5 | 32 | 30 | 17 | 31 | 17 | 30 | 8.5 | 17 | M5×0.8×7 | 14 |
| NCY3R20 | 9 | 9.5 | 5.2 | 3 | 1 | 21.6 | 9 | 6 | 39 | 37.5 | 39 | 36 | 21 | 38 | 24 | 36 | 7.5 | 24 | M6×1×8 | 11 |
| NCY3R25 | 8.5 | 9.5 | 5.2 | 3 | 1 | 26.4 | 8.5 | 6 | 44 | 42.5 | 44 | 41 | 23.5 | 43 | 23.5 | 41 | 6.5 | 23.5 | M6×1×8 | 15 |
| NCY3R32 | 10.5 | 11 | 6.5 | 3 | 1.5 | 33.6 | 10.5 | 7 | 55 | 53.5 | 55 | 52 | 29 | 54 | 29 | 51 | 7 | 29 | M8×1.25×10 | 13 |
| NCY3R40 | 10 | 11 | 6.5 | 5 | 2 | 41.6 | 13 | 7 | 65 | 63.5 | 67 | 62 | 36 | 66 | 36 | 62 | 8 | 36 | M8×1.25×10 | 15 |
| NCY3R50 | 14 | 14 | 8.2 | 5 | 2 | 52.4 | 17 | 8.5 | 83 | 81.5 | 85 | 80 | 45 | 84 | 45 | 80 | 9 | 45 | M10×1.5×15 | 25 |
| NCY3R63 | 15 | 14 | 8.2 | 5 | 3 | 65.4 | 18 | 8.5 | 95 | 93.5 | 97 | 92 | 51 | 96 | 51 | 90 | 9.5 | 51 | M10×1.5×15 | 24 |

| Model | L | LD | M | MM | N | PW | Q | QW | T | TC | W | WP | WS | X | Y | Z | P (Piping port) | | |
|---|---|---|---|---|---|---|---|---|---|---|---|---|---|---|---|---|---|---|---|
| | | | | | | | | | | | | | | | | | Blank | TN | TF |
| NCY3R6 | 34 | 3.5 | 3.5 | M3×0.5 | 3.5 | 19 | 60 | 10 | 14.5 | 10.5 | 20 | 9.5 | 6 | 10 | 35.5 | 66 | M3×0.5 | - | - |
| NCY3R10 | 38 | 3.5 | 4 | M3×0.5 | 4.5 | 26 | 68 | 14 | 17.5 | 14 | 20 | 13 | 8 | 15 | 39.5 | 76 | M5×0.8 | - | - |
| NCY3R15 | 53 | 4.3 | 5 | M4×0.7 | 6 | 32 | 84 | 18 | 19 | 17 | 25 | 16 | 7 | 18 | 54.5 | 94 | M5×0.8 | - | - |
| NCY3R20 | 62 | 5.4 | 5 | M4×0.7 | 7 | 38 | 95 | 17 | 20.5 | 20 | 40 | 19 | 7 | 22 | 64 | 107 | Rc1/8 | NPT/8 | G1/8 |
| NCY3R25 | 70 | 5.4 | 6 | M5×0.8 | 6.5 | 43 | 105 | 20 | 21.5 | 22.5 | 40 | 21.5 | 7 | 28 | 72 | 117 | Rc1/8 | NPT1/8 | G1/8 |
| NCY3R32 | 76 | 7 | 7 | M6×1 | 8.5 | 54 | 116 | 26 | 24 | 28 | 50 | 27 | 7 | 35 | 79 | 130 | Rc1/8 | NPT1/8 | G1/8 |
| NCY3R40 | 90 | 7 | 8 | M6×1 | 11 | 64 | 134 | 34 | 26 | 33 | 60 | 32 | 7 | 40 | 93 | 148 | Rc1/4 | NPT1/4 | G1/4 |
| NCY3R50 | 110 | 8.6 | 10 | M8×1.25 | 15 | 82 | 159 | 48 | 30 | 42 | 60 | 41 | 10 | 50 | 113 | 176 | Rc1/4 | NPT1/4 | G1/4 |
| NCY3R63 | 118 | 8.6 | 10 | M8×1.25 | 16 | 94 | 171 | 60 | 32 | 48 | 70 | 47 | 10 | 60 | 121 | 188 | Rc1/4 | NPT1/4 | G1/4 |

**Centralized piping type: Φ10~Φ63**

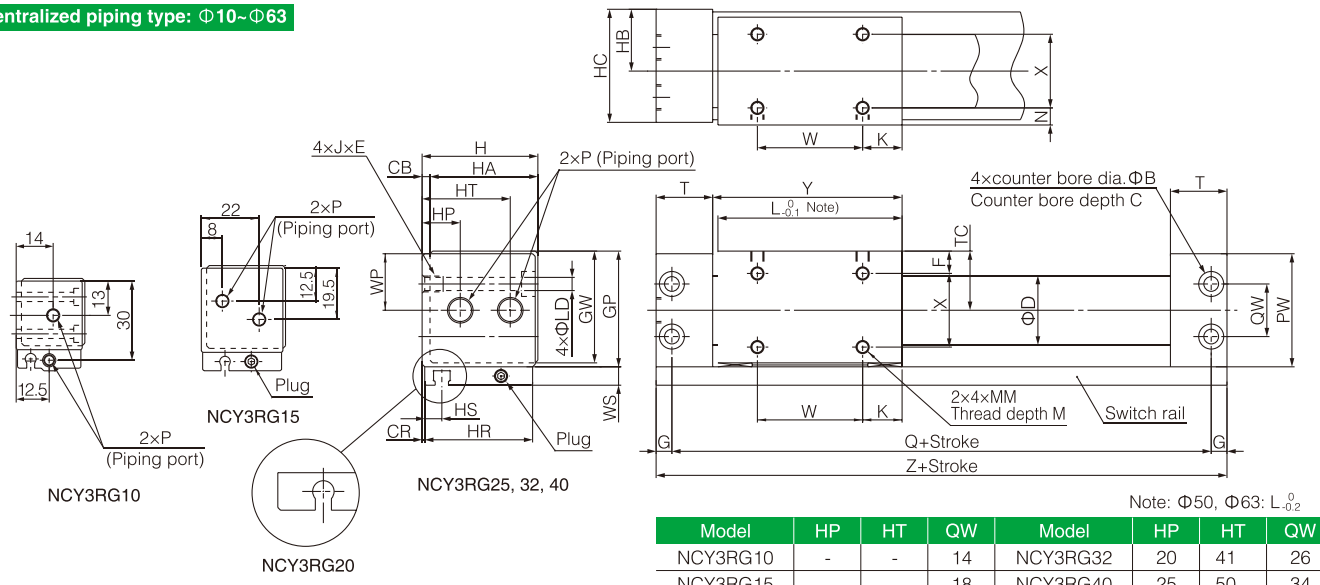


| Model | HP | HT | QW | Model | HP | HT | QW |
|---|---|---|---|---|---|---|---|
| NCY3RG10 | - | - | 14 | NCY3RG32 | 20 | 41 | 26 |
| NCY3RG15 | - | - | 18 | NCY3RG40 | 25 | 50 | 34 |
| NCY3RG20 | 11 | 28 | 17 | NCY3RG50 | 32 | 56 | 48 |
| NCY3RG25 | 14.5 | 33.5 | 20 | NCY3RG63 | 35 | 63.5 | 60 |

## Specifications

| Bore size(mm) | 6 | 10 | 15 | 20 | 25 | 32 | 40 |
|---|---|---|---|---|---|---|---|
| Fluid | Air (to be filtered by 40μm filter element) | | | | | | |
| Action | Double acting | | | | | | |
| Maximum operating pressure | 0.7MPa | | | | | | |
| Minimum operating pressure | 0.18MPa | | | | | | |
| Ambient and fluid temperature | -10~60℃ (No freezing) | | | | | | |
| Piston speed (mm/s) | 50~400 | | | | | | |
| Cushion Note 1) | Rubber bumper | | | | | | |
| Stroke length tolerance (mm) | $0\sim250^{+1.0}_{0}$, $251\sim1000^{+1.4}_{0}$, $1001\sim^{+1.8}_{0}$ | | | | | | |
| Lubrication Note 2) | Not required (Non-lube) | | | | | | |
| Port size | M5×0.8 | | | 1/8" | | | 1/4" |
| Installation posture | Unlimited | | | | | | |

Note: 1. Hydraulic Buffer Optional (Slide-only-NCY1S) ;
2. If lubrication is required, please use turbine No.1 oil ISO VG32.

## Symbol

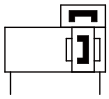

## Ordering code

N C D Y1 S 25 H – 300 □ – A73 S

**Switch rail**

| | |
|---|---|
| Blank | Without switch rail |
| D | With switch rail |

* Basic type No D type.

**Slider type**

| | |
|---|---|
| S | Slider type (sliding bearing) |

**Bore size**

| | |
|---|---|
| 6 | 6mm |
| 10 | 10mm |
| 15 | 15mm |
| 20 | 20mm |
| 25 | 25mm |
| 32 | 32mm |
| 40 | 40mm |

**Magnet retention force categories**

| | |
|---|---|
| H | High retention |
| L | Low retention |

* Bore size Φ6, Φ10 No L Type

**Stroke**

(See right table)

**Adjustment Form**

| | |
|---|---|
| Blank | With two adjusting screw |
| B | With two hydraulic buffers |
| BS | With one hydraulic buffers |

* Basic type without adjustment form

**Magnetic switch type**

| | |
|---|---|
| Blank | Without magnetic switch |

* Magnetic switch type refer stroke/Magnetic switch model table
* The basic type does not have this item.

**Number of magnetic switches**

| | |
|---|---|
| Blank | 2 pcs. |
| S | 1 pc. |
| n | "n" pcs. |

## Stroke/magnetic switch model table

| Bore size (mm) | Standard stroke Note 1) | Max. stroke | | Magnetic switch model Note 2) (Track installation, slide type only) |
|---|---|---|---|---|
| | | Basic type | Slider type | |
| 6 | 50,100,150,200 | 300 | 300 | A73 |
| 10 | 50,100,150,200,250,300 | 500 | 500 | |
| 15 | 50,100,150,200,250,300, 350,400,450,500 | - | 750 | |
| 20 | 100,150,200,250,300,350 400,450,500,600,700,800 | - | 1000 | |
| 25 | | - | 1500 | |
| 32 | | | | |
| 40 | 100,150,200,250,300,350 400,450,500,600,700,800 900,1000 | - | | |

Note: 1.There are non-standard stroke to choose from.
2. The specifications and characteristics of magnetic switches can be referred to the series of magnetic switches.
Wire length representation mark: no mark-0.5m, L-3m, Z-5m,
Example: A73, A73L.

## Cylinder theoretical output force and magnetic couple retention force

**Φ6, Φ10**

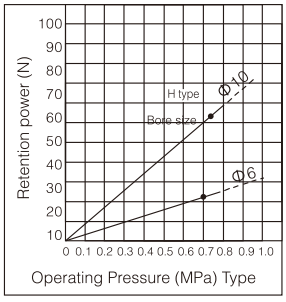


**Φ15, Φ20, Φ25, Φ32, Φ40**

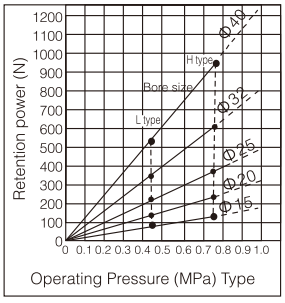


| Bore size (mm) | Model | Retention power H type(N) | Pressure corresponding to magnetic couple holding force (Mpa) | Maximum operating pressure during stopping (Mpa) |
|---|---|---|---|---|
| 6 | NCY1□6H | 19.6 | 0.7 | 0.55 |
| 10 | NCY1□10H | 53.9 | 0.7 | 0.55 |
| 15 | NCY1□15H | 137.3 | 0.79 | 0.65 |
| 20 | NCY1□20H | 231 | 0.76 | 0.65 |
| 25 | NCY1□25H | 362.8 | 0.75 | 0.65 |
| 32 | NCY1□32H | 588.4 | 0.74 | 0.65 |
| 40 | NCY1□40H | 921.8 | 0.75 | 0.65 |

## Maximum load and stroke (NCY1S)

If the load and the center of gravity of the slider are at the same point, the force-stroke relationship curve is as follows.

Use cylinder, as close as possible to the center of gravity of the load and slider, if not possible, please contact our company.

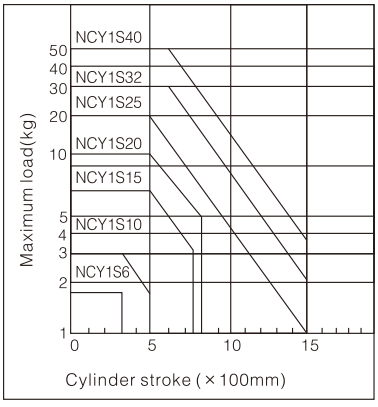

## Dimensions

### Basic type(NC□Y1S6・10)

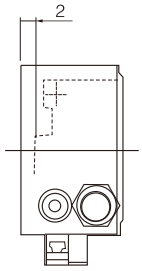


The switching track can also be fixed on the top of the cylinder.

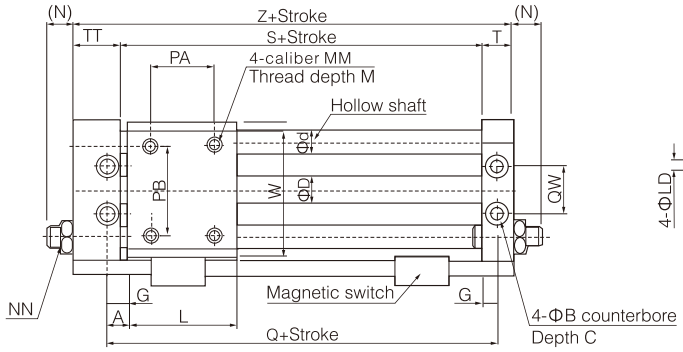


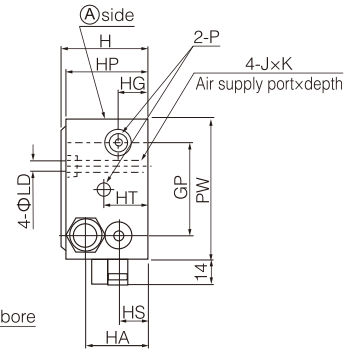


| Model | Stroke range | ΦD | Φd | A | ΦB | C | HT | G | GP | H | HA | HG | HP | HS | T | J×K | L | LD | M |
|---|---|---|---|---|---|---|---|---|---|---|---|---|---|---|---|---|---|---|---|
| NCY1S6<br>NCDY1S6 | ~300 | 7.6 | 8 | 6 | 6.5 | 3 | 17 | 5 | 32 | 27 | 19 | 8 | 26 | 8 | 10 | M4×0.7×6.5 | 40 | 3.5 | 6 |
| NCYS10<br>NCDY1S10 | ~300 | 12 | 10 | 7.5 | 8 | 4 | 18 | 6.5 | 40 | 34 | 25.5 | 12 | 33 | 14 | 12.5 | M5×0.8×9.5 | 45 | 4.3 | 6 |

| Model | MM | NN | (N) | P | *PA | PB | PW | QW | Q | S | TT | Z | W |
|---|---|---|---|---|---|---|---|---|---|---|---|---|---|
| NCY1S6<br>NCDY1S6 | M4×0.7 | M8×1.0 | 10 | M5×0.8 | 25 | 25 | 50 | 16 | 52 | 42 | 16 | 68 | 46 |
| NCY1S10<br>NCDY1S10 | M4×0.7 | M8×1.0 | 9.5 | M5×0.8 | 25 | 38 | 60 | 24 | 60 | 47 | 20.5 | 80 | 58 |

Note: The magnetic switch can also be installed on sideⒶ.
* The size center of PA is the same as that of L.

### NC□Y1S15・20・25・32・40

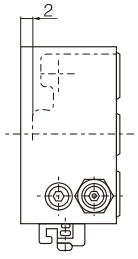


The switching track can also be fixed on the top of the cylinder.

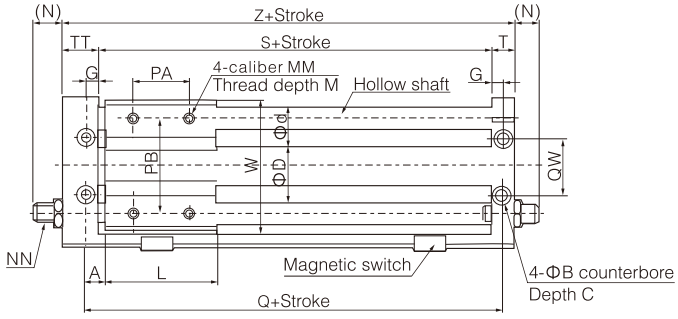


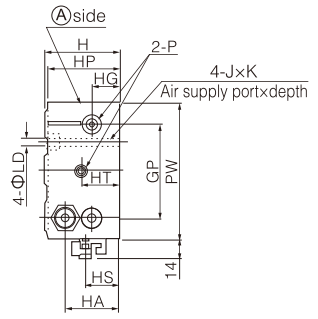


| Model | Stroke range | ΦD | Φd | A | ΦB | C | HT | G | GP | H | HA | HG | HP | HS | T | J×K | L | LD | M |
|---|---|---|---|---|---|---|---|---|---|---|---|---|---|---|---|---|---|---|---|
| NC□Y1S15 | ~750 | 16.6 | 12 | 7.5 | 9.5 | 5 | 21 | 6.5 | 52 | 40 | 29 | 13 | 39 | 15 | 12.5 | M6×1.0×9.5 | 60 | 5.6 | 8 |
| NC□Y1S20 | ~1500 | 21.6 | 16 | 10 | 9.5 | 5.2 | 20 | 8.5 | 62 | 46 | 36 | 17 | 45 | 25.5 | 16.5 | M6×1.0×9.5 | 70 | 5.6 | 10 |
| NC□Y1S25 | ~1500 | 26.4 | 16 | 10 | 11 | 6.5 | 20 | 8.5 | 70 | 54 | 40 | 20 | 53 | 53 | 16.5 | M8×1.25×10 | 70 | 7 | 10 |
| NC□Y1S32 | ~1500 | 33.6 | 20 | 12.5 | 14 | 8 | 24 | 9.5 | 86 | 66 | 46 | 24 | 64 | 27 | 18.5 | M10×1.5×15 | 85 | 8.7 | 12 |
| NC□Y1S40 | ~1500 | 41.6 | 25 | 12.5 | 14 | 8 | 25 | 10.5 | 104 | 76 | 57 | 25 | 74 | 30 | 20.5 | M10×1.5×15 | 95 | 8.7 | 12 |

| Model | MM | NN | (N) | P | *PA | PB | PW | QW | Q | S | TT | Z | W |
|---|---|---|---|---|---|---|---|---|---|---|---|---|---|
| NC□Y1S15 | M5×0.8 | M8×1.0 | 7.5 | M5×0.8 | 30 | 50 | 75 | 30 | 75 | 62 | 22.5 | 97 | 72 |
| NC□Y1S20 | M6×1.0 | M10×1.0 | 9.5 | 1/8" | 40 | 70 | 90 | 38 | 90 | 73 | 25.5 | 115 | 87 |
| NC□Y1S25 | M6×1.0 | M14×1.5 | 11 | 1/8" | 40 | 70 | 100 | 42 | 90 | 73 | 25.5 | 115 | 97 |
| NC□Y1S32 | M8×1.25 | M20×1.5 | 11.5 | 1/8" | 40 | 75 | 122 | 50 | 110 | 91 | 28.5 | 138 | 119 |
| NC□Y1S40 | M8×1.25 | M20×1.5 | 10.5 | 1/8" | 65 | 105 | 145 | 64 | 120 | 99 | 35.5 | 155 | 142 |

Note: The magnetic switch can also be installed on sideⒶ.
* The size center of PA is the same as that of L.

# NCY1L Series
## Magnetically Coupled Rodless Cylinder

## Specifications

| Bore size(mm) | 6 | 10 | 15 | 20 | 25 | 32 | 40 |
|---|---|---|---|---|---|---|---|
| Fluid | Air (to be filtered by 40μm filter element) | | | | | | |
| Action | Double acting | | | | | | |
| Maximum operating pressure | 0.7MPa | | | | | | |
| Minimum operating pressure | 0.18MPa | | | | | | |
| Ambient and fluid temperature | -10~60℃ (No freezing) | | | | | | |
| Piston speed (mm/s) | 50~1000 | | | | | | |
| Cushion | Both ends rubber buffer / hydraulic buffer (optional) | | | | | | |
| Stroke length tolerance (mm) | $0\sim250^{+1.0}_{0}$, $251\sim1000^{+1.4}_{0}$, $1001\sim^{+1.8}_{0}$ | | | | | | |
| Lubrication Note) | Not required (Non-lube) | | | | | | |
| Port size | M8×0.8 | | | 1/8" | | | 1/4" |
| Installation posture | Unlimited | | | | | | |

Note: If lubrication is required, please use turbine No.1 oil ISO VG32.

## Ordering code

N C Y1 L — 25 — H – 300 □ – A73 □

**Slider type**

| | |
|---|---|
| L | Ball bushing bearing |

**Bore size**

| | |
|---|---|
| 6 | 6mm |
| 10 | 10mm |
| 15 | 15mm |
| 20 | 20mm |
| 25 | 25mm |
| 32 | 32mm |
| 40 | 40mm |

**magnet retention force type**

| | |
|---|---|
| H | High retention |
| L | Low retention |

**Stroke**
(See table below)

**Adjustment form**

| | |
|---|---|
| Blank | With two adjusting screw |
| B | With two hydraulic buffers |
| BS | With one hydraulic buffers |

* Basic type without adjustment form

**Magnetic switch**

| | |
|---|---|
| Blank | without magnetic switch |

* Refer to the table below for the type of magnetic switch.

**Number of magnetic switches**

| | |
|---|---|
| Blank | 2 pcs. |
| S | 1 pc. |
| n | "n" pcs. |

## Stroke/magnetic switch model table

| Bore size (mm) | Standard stroke Note 1) | Max. stroke | Magnetic switch model (Track Installation) Note 2) |
|---|---|---|---|
| 6 | 50, 100, 150, 200 | 300 | A73 |
| 10 | 50, 100, 150, 200, 250, 300 | 500 | |
| 15 | 50, 100, 150, 200, 250, 300, 350, 400, 450, 500 | 750 | |
| 20 | 50, 100, 150, 200, 250, 300, 350, 400, 450, 500, 600, 700, 800 | 1000 | |
| 25 | | 1500 | |
| 32 | | | |
| 40 | 50, 100, 150, 200, 250, 300, 350, 400, 450, 500, 600, 700, 800, 900,1000 | | |

Note: 1. There are non-standard stroke to choose from.
2. The specifications and characteristics of magnetic switches can be referred to the series of magnetic switches.
Wire length representation mark: no mark-0.5m, L-3m, Z-5m,
Example: A73, A73L.

## Maximum load and stroke (NCY1L)

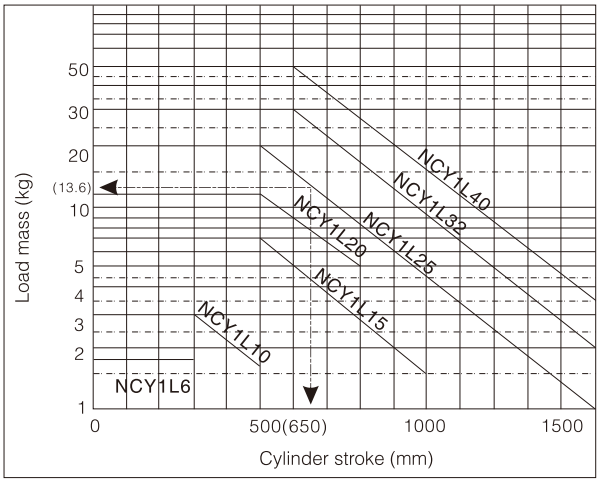

## Dimensions

### NCY1L6, 10

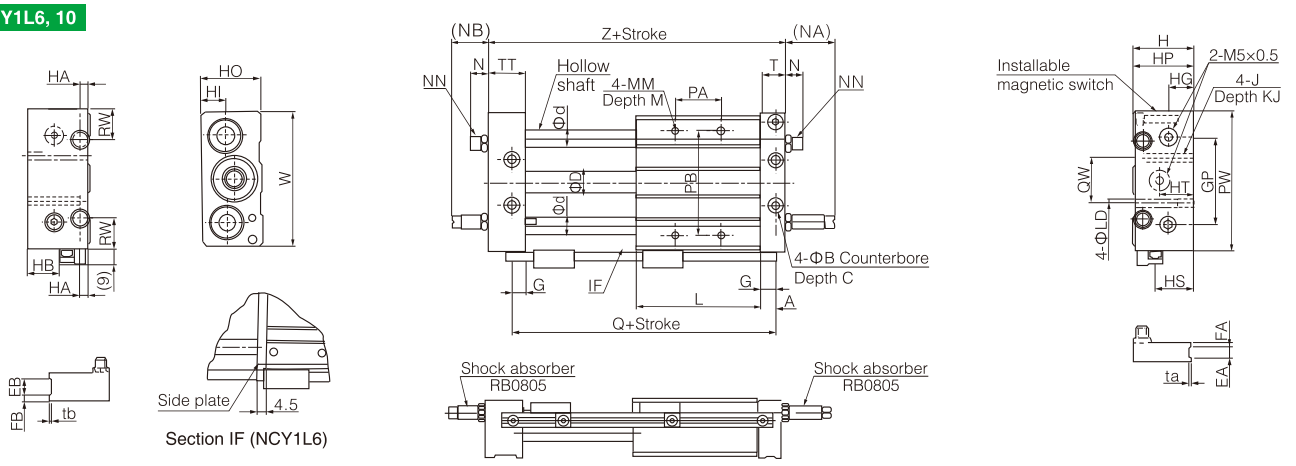


| Model | Stroke range | A | B | C | D | d | EA | EB | EA | FB | G | GP | H | HA | HB | HG | HI | HO | HP | HS | HT |
|---|---|---|---|---|---|---|---|---|---|---|---|---|---|---|---|---|---|---|---|---|---|
| NCY1L6 | ~300 | 7 | 6.5 | 3 | 7.6 | 8 | - | - | - | - | 6 | 36 | 27 | 6 | 10 | 11 | 9 | 25 | 26 | 14 | 16 |
| NCY1L10 | ~500 | 8.5 | 8 | 4 | 12 | 10 | 6 | 12 | 3 | 5 | 7.5 | 50 | 34 | 6 | 17.5 | 14.5 | 13.5 | 33 | 33 | 21.5 | 18 |

| Model | J | JK | L | LD | M | MM | N | (NA) | (NB) | NN | *PA | PB | PW | Q | QW | RW | T | TT | ta | tb | W | Z |
|---|---|---|---|---|---|---|---|---|---|---|---|---|---|---|---|---|---|---|---|---|---|---|
| NCY1L6 | M4×0.7 | 6.5 | 40 | 3.5 | 6 | M4×0.7 | 10 | 30 | 24 | M8×1.0 | 24 | 40 | 60 | 54 | 20 | 12 | 10 | 16 | - | - | 56 | 68 |
| NCY1L10 | M5×0.8 | 9.5 | 68 | 4.3 | 8 | M4×0.7 | 9.5 | 27 | 19 | M8×1.0 | 30 | 60 | 80 | 85 | 26 | 17.5 | 12.5 | 20.5 | 0.5 | 1.0 | 77 | 103 |

* The size center of PA is the same as that of L.

### NCY1L15, 20, 25, 32, 40

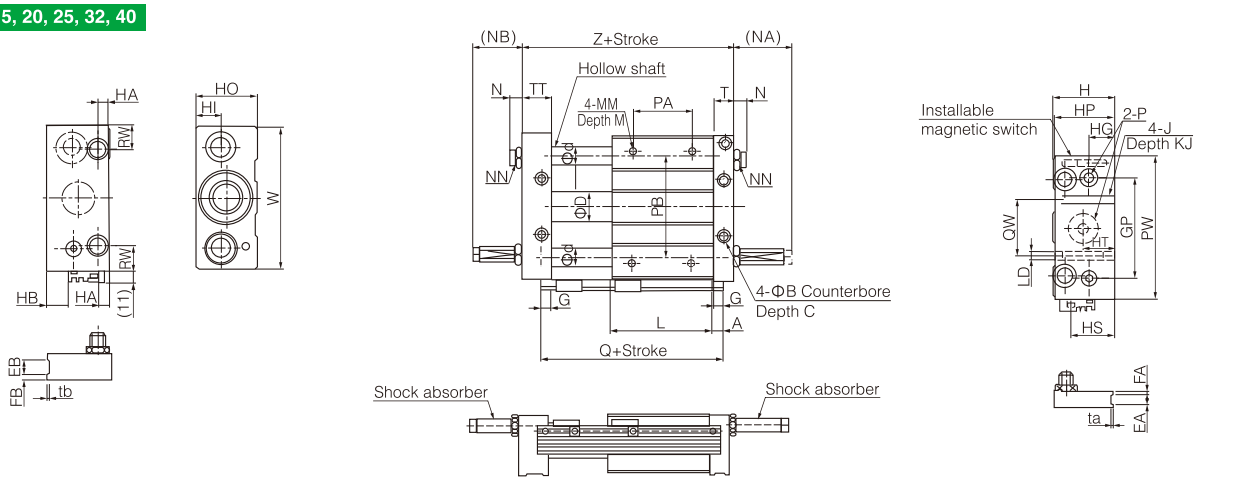


| Model | Stroke range | A | B | C | D | d | EA | EB | FA | FB | G | GP | H | HA | HB | HG | HI | HO | HP | HS | HT | J | JK | L | LD |
|---|---|---|---|---|---|---|---|---|---|---|---|---|---|---|---|---|---|---|---|---|---|---|---|---|---|
| NCY1L15 | ~750 | 7.5 | 9.5 | 5 | 16.6 | 12 | 6 | 13 | 3 | 6 | 6.5 | 65 | 40 | 6.5 | 4 | 16 | 14 | 38 | 39 | 25 | 16 | M6×1.0 | 9.5 | 75 | 5.6 |
| NCY1L20 | ~ 1500 | 9.5 | 9.5 | 5.2 | 21.6 | 16 | - | - | - | - | 8.5 | 80 | 46 | 9 | 10 | 18 | 16 | 44 | 45 | 31 | 20 | M6×1.0 | 10 | 86 | 5.6 |
| NCY1L25 | ~1500 | 9.5 | 11 | 6.5 | 26.4 | 16 | 8 | 14 | 4 | 7 | 8.5 | 90 | 54 | 9 | 18 | 23 | 21 | 52 | 53 | 39 | 20 | M8×1.25 | 10 | 86 | 7 |
| NCY1L32 | ~1500 | 10.5 | 14 | 8 | 33.6 | 20 | 8 | 16 | 5 | 7 | 9.5 | 110 | 66 | 12 | 26.5 | 26.5 | 24.5 | 64 | 64 | 47.5 | 25 | M10×1.5 | 15 | 100 | 9.2 |
| NCY1L40 | ~1500 | 11.5 | 14 | 8 | 41.6 | 25 | 10 | 20 | 5 | 10 | 10.5 | 130 | 78 | 12 | 35 | 30.5 | 28.5 | 76 | 74 | 56 | 30 | M10×1.5 | 15 | 136 | 9.2 |

| Model | M | MM | (N) | (NA) | (NB) | NN | P | *PA | PB | PW | Q | QW | RW | T | Ta | Tb | TT | W | Z | Shock absorber |
|---|---|---|---|---|---|---|---|---|---|---|---|---|---|---|---|---|---|---|---|---|
| NCY1L15 | 8 | M5×0.8 | 7.5 | 27 | 17 | M8×1.0 | M5×0.8 | 45 | 70 | 95 | 90 | 30 | 15 | 12.5 | 0.5 | 1.0 | 22.5 | 92 | 112 | RB0805 |
| NCY1L20 | 10 | M6×1.0 | 10 | 29 | 20 | M10×1.0 | Rc(PT)1/8 | 50 | 90 | 120 | 105 | 40 | 28 | 16.5 | - | - | 25.5 | 117 | 130 | RB1006 |
| NCY1L25 | 10 | M6×1.0 | 11 | 49 | 40 | M14×1.5 | Rc(PT)1/8 | 60 | 100 | 130 | 105 | 50 | 22 | 16.5 | 0.5 | 1.0 | 25.5 | 127 | 130 | RB1411 |
| NCY1L32 | 12 | M8×1.25 | 11.5 | 52 | 42 | M20×1.5 | Rc(PT)1/8 | 70 | 120 | 160 | 121 | 60 | 33 | 18.5 | 0.5 | 1.0 | 28.5 | 157 | 149 | RB2015 |
| NCY1L40 | 12 | M8×1.25 | 10.5 | 51 | 36 | M20×1.5 | Rc(PT)1/8 | 90 | 140 | 190 | 159 | 84 | 35 | 20.5 | 1.0 | 1.0 | 35.5 | 187 | 194 | RB2015 |

* The size center of PA is the same as that of L.

## Specifications

| Bore size(mm) | 10 | 16 | 20 | 25 |
|---|---|---|---|---|
| Fluid | Air (to be filtered by 40μm filter element) | | | |
| Action | Double acting | | | |
| Use pressure range | 0.1~1.0MPa(14~145psi) | | | |
| Guarantee pressure resistance | 1.5MPa(215psi) | | | |
| working temperature | -20~70℃ | | | |
| Use speed range (mm/s) | 30~500 | | | |
| Stroke length tolerance (mm) | $^{+1.0}_{0}$ | | | |
| Cushion | Without | Anti-collision pad or hydraulic buffer (optional) | | |
| Accuracy of non-rotation Note 1) | ±.01° | ±0.05° | | |
| Port size Note 2) | M5×0.8 | | | 1/8" |

Note: 1. The non-rotating precision is that the cylinder is fully recovered, the angle of the cylinder fixing plate can be rotated.
2. NPT and G thread can be choosed.
In addition: STM series are magnetically attached.

## Symbol

STMB

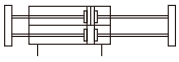

STMS

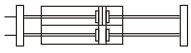

## Stroke

| Bore size(mm) | Standard stroke (mm) | Maximum stroke | Permissible stroke |
|---|---|---|---|
| 10 | 25 50 75 100 | 100 | 150 |
| 16 | 25 50 75 100 125 175 200 | 200 | 250 |
| 20, 25 | 25 50 75 100 125 175 200 250 | 250 | 300 |

Note: Within the allowable range, when the stroke is greater than the maximum, it should be treated as non-standard. For other special stroke, please contact our company.

## Product feature

1. Two types of installation and fixing: body installation or slider installation;
2. Dual piston rod structure makes the cylinder have better bending and torsion resistance, and can bear larger moving load or lateral load.
3. Buffer devices such as anti-collision pads at both ends or oil pressure buffers can effectively slow down the impact speed and prolong the service life of cylinders.
4. Choosing high temperature resistant sealing material can ensure the normal operation of cylinder at 150℃.

## Ordering code

**STM B – 25 × 50 – □**

**Model**

| | |
|---|---|
| STM | Air slide table (Double-acting) |

**Fixed mode**

| | |
|---|---|
| B | Body fixed type |
| S | Slider fixed type |

**Bore size**

| | |
|---|---|
| 10 | 10mm |
| 16 | 16mm |
| 20 | 20mm |
| 25 | 25mm |

**Stroke**

**Thread type** Note)

| | |
|---|---|
| Blank | PT |
| G | G |
| T | NPT |

Note: When the piping size is M5, this code is empty.

## Fixed mode

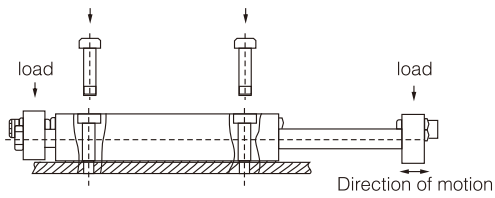


STMB: Body fixed type

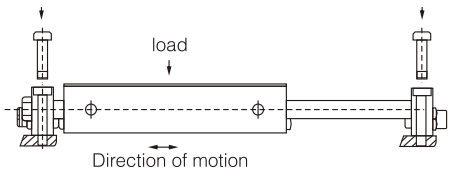


STMS: Slider fixed type

## Cylinder theoretical output meter

| Bore size (mm) | Piston rod outer diameter (mm) | Action type | Compression area (mm²) | Air pressure (MPa) | | | | | | |
|---|---|---|---|---|---|---|---|---|---|---|
| | | | | 0.1 | 0.2 | 0.3 | 0.4 | 0.5 | 0.6 | 0.7 |
| 10 | 6 | Double motion | 100.5 | 10.1 | 20.1 | 30.2 | 40.2 | 50.3 | 60.3 | 70.4 |
| 16 | 8 | Double motion | 301.6 | 30.2 | 60.3 | 90.5 | 120.6 | 150.8 | 181.0 | 211.1 |
| 20 | 10 | Double motion | 471.2 | 47.1 | 94.2 | 141.4 | 188.5 | 235.6 | 282.7 | 329.9 |
| 25 | 12 | Double motion | 755.6 | 75.6 | 151.1 | 226.7 | 302.2 | 377.8 | 453.3 | 528.9 |

## Dimensions

### STMB-10

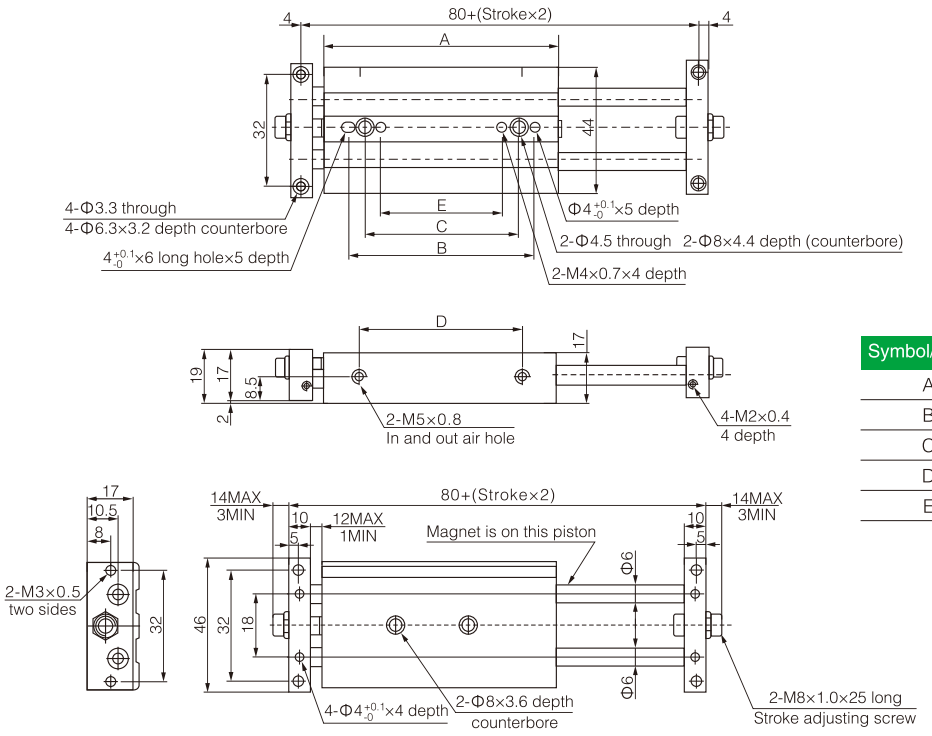


| Symbol/Stroke | 25 | 50 | 75 | 100 |
|---|---|---|---|---|
| A | 81 | 106 | 131 | 156 |
| B | 65 | 85 | 85 | 85 |
| C | 35 | 60 | 60 | 60 |
| D | 46 | 71 | 96 | 121 |
| E | 15 | 40 | 40 | 40 |

### STMB-16

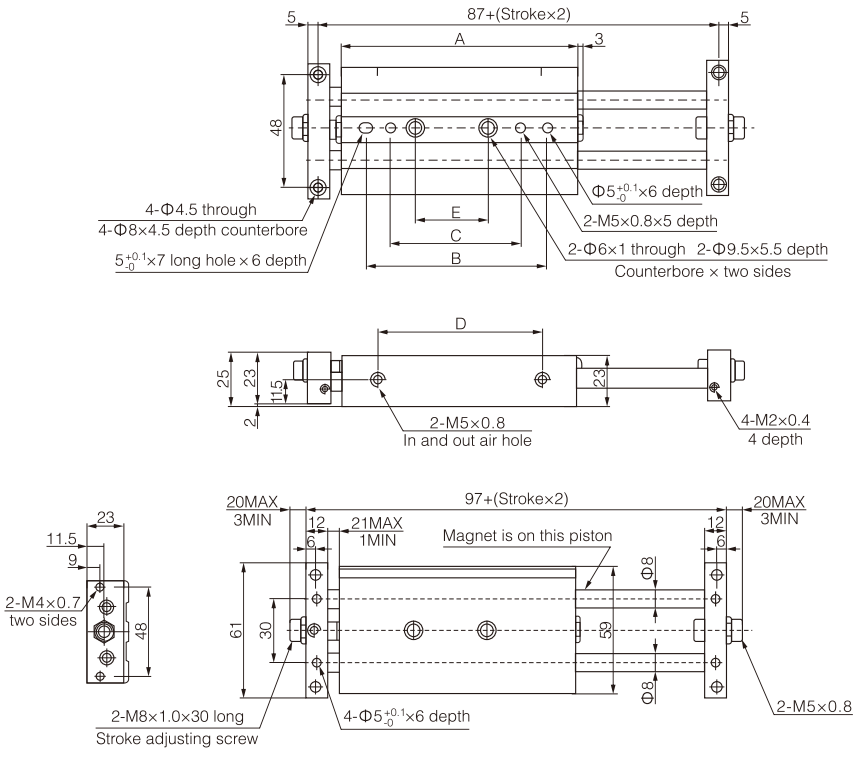


| Stroke/Symbol | A | B | C | D | E |
|---|---|---|---|---|---|
| 25 | 86 | 55 | - | 48 | 25 |
| 50 | 111 | 80 | - | 73 | 50 |
| 75 | 136 | 105 | 75 | 98 | 45 |
| 100 | 161 | 130 | 100 | 123 | 70 |
| 125 | 186 | 150 | 120 | 148 | 90 |
| 150 | 211 | 150 | 120 | 173 | 90 |
| 175 | 236 | 150 | 120 | 198 | 90 |
| 200 | 261 | 150 | 120 | 223 | 90 |

## STMB-20

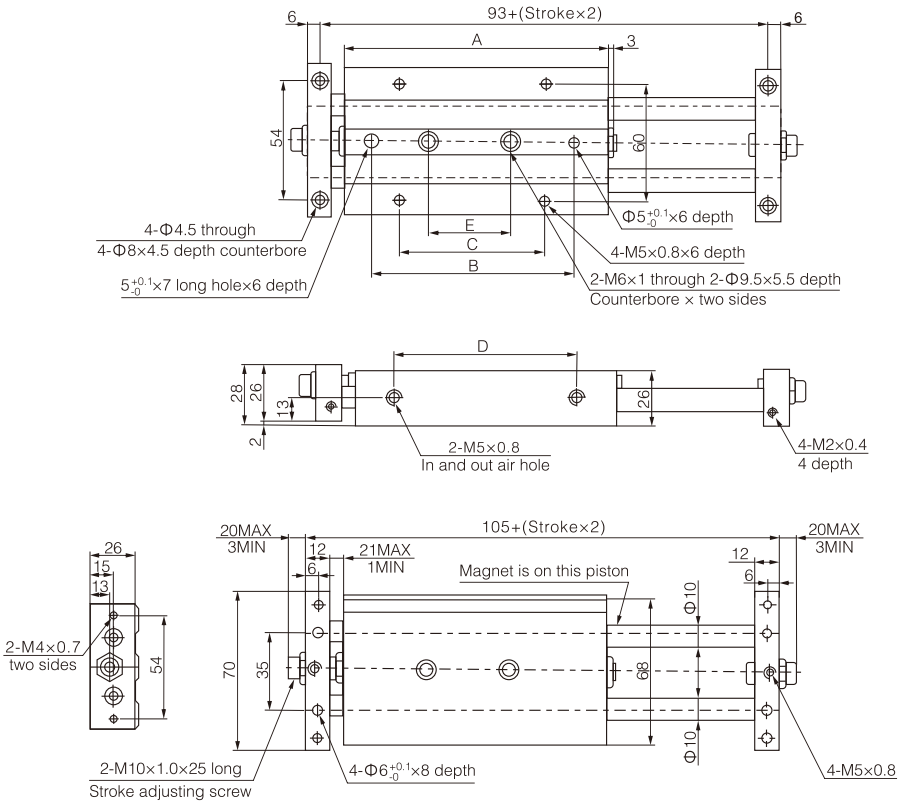


| Stroke/Symbol | A | B | C | D | E |
|---|---|---|---|---|---|
| 25 | 94 | 60 | 50 | 53 | 35 |
| 50 | 119 | 85 | 50 | 78 | 45 |
| 75 | 144 | 110 | 75 | 103 | 45 |
| 100 | 169 | 135 | 100 | 128 | 70 |
| 125 | 194 | 150 | 120 | 153 | 90 |
| 150 | 219 | 150 | 120 | 178 | 90 |
| 175 | 244 | 150 | 120 | 203 | 90 |
| 200 | 269 | 150 | 120 | 228 | 90 |
| 250 | 319 | 150 | 120 | 278 | 90 |

## STMB-25

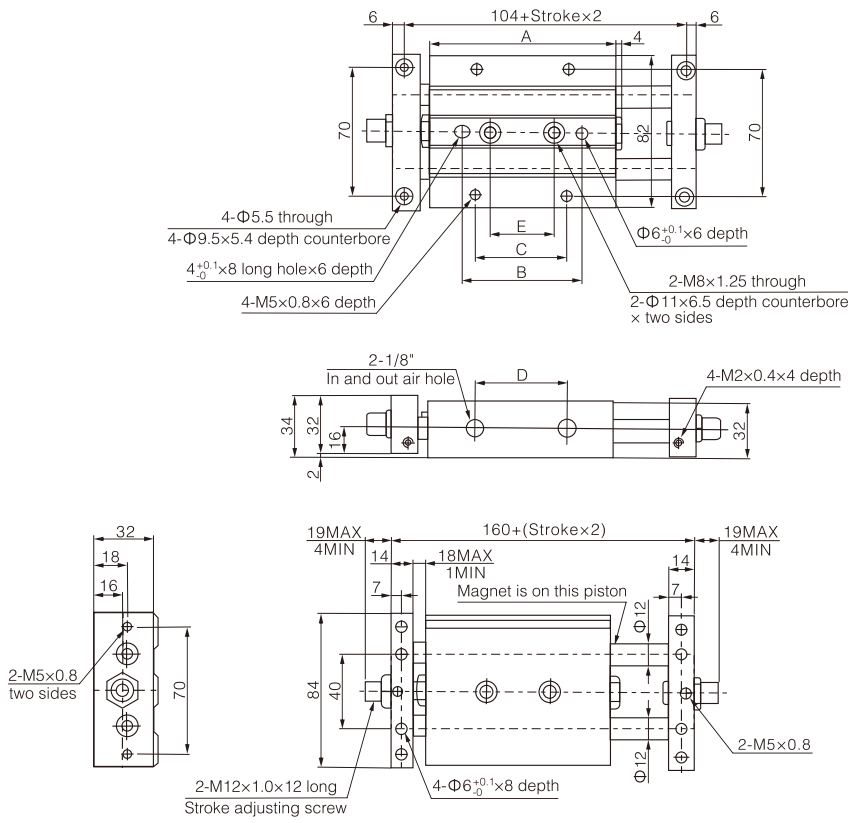


| Stroke/Symbol | A | B | C | D | E |
|---|---|---|---|---|---|
| 25 | 101 | 65 | 50 | 50 | 35 |
| 50 | 126 | 90 | 50 | 75 | 45 |
| 75 | 151 | 115 | 75 | 100 | 45 |
| 100 | 176 | 140 | 100 | 125 | 70 |
| 125 | 201 | 140 | 100 | 150 | 95 |
| 150 | 226 | 140 | 100 | 175 | 100 |
| 175 | 251 | 140 | 100 | 200 | 100 |
| 200 | 276 | 140 | 100 | 225 | 100 |
| 250 | 326 | 140 | 100 | 275 | 100 |

## STMS-10

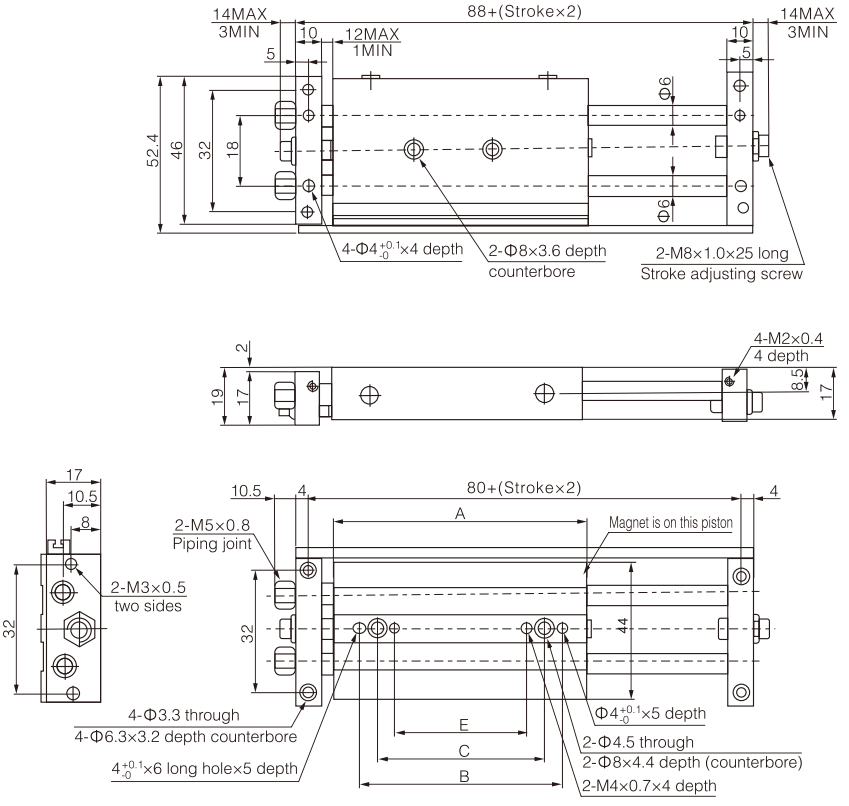


| Symbol/Stroke | 25 | 50 | 75 | 100 |
|---|---|---|---|---|
| A | 81 | 106 | 131 | 156 |
| B | 65 | 85 | 85 | 85 |
| C | 35 | 60 | 60 | 60 |
| E | 15 | 40 | 40 | 40 |

## STMS-16

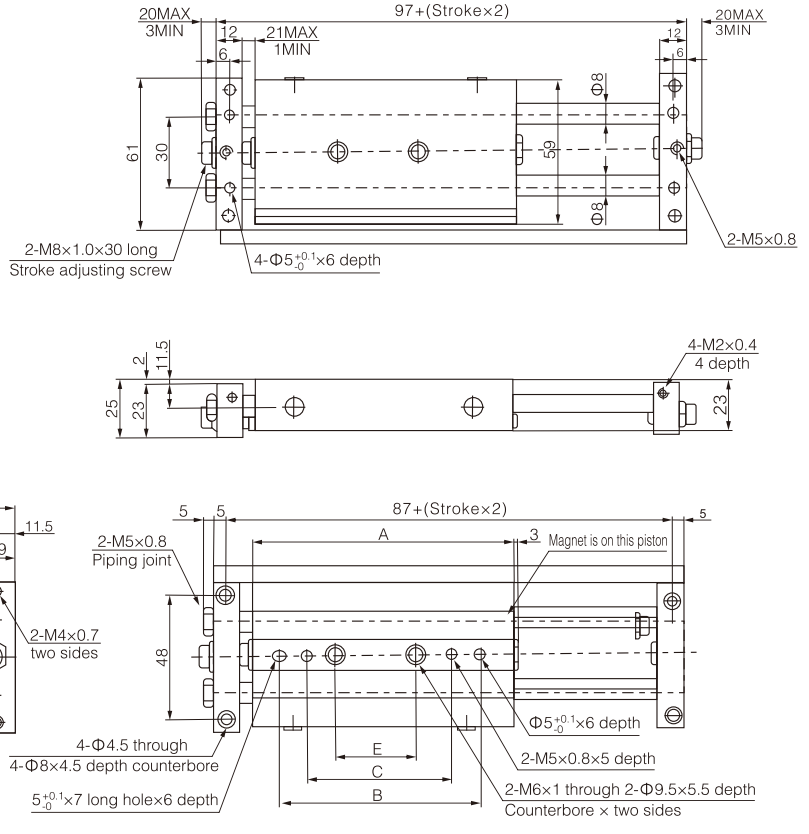


| Stroke/Symbol | A | B | C | E |
|---|---|---|---|---|
| 25 | 86 | 55 | - | 25 |
| 50 | 111 | 80 | - | 50 |
| 75 | 136 | 105 | 75 | 45 |
| 100 | 161 | 130 | 100 | 70 |
| 125 | 186 | 150 | 120 | 90 |
| 150 | 211 | 150 | 120 | 90 |
| 175 | 236 | 150 | 120 | 90 |
| 200 | 261 | 150 | 120 | 90 |

## STMS-20

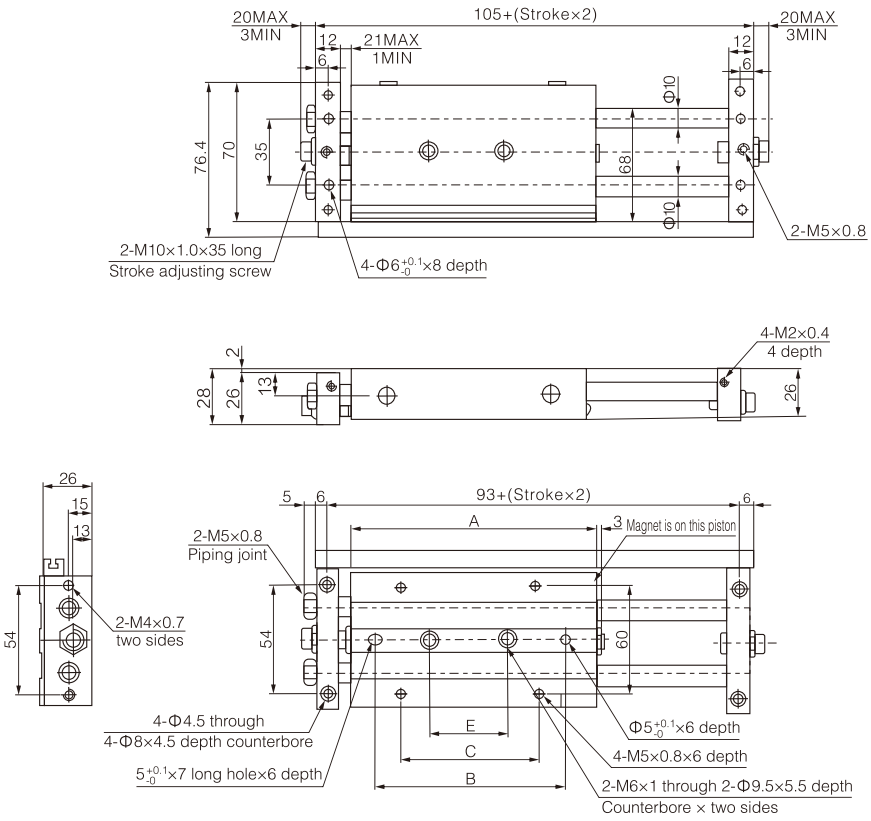


| Stroke/Symbol | A | B | C | E |
|---|---|---|---|---|
| 25 | 94 | 60 | 50 | 35 |
| 50 | 119 | 85 | 50 | 45 |
| 75 | 144 | 110 | 75 | 45 |
| 100 | 169 | 135 | 100 | 70 |
| 125 | 194 | 150 | 120 | 90 |
| 150 | 219 | 150 | 120 | 90 |
| 175 | 244 | 150 | 120 | 90 |
| 200 | 269 | 150 | 120 | 90 |
| 250 | 319 | 150 | 120 | 90 |

## STMS-25

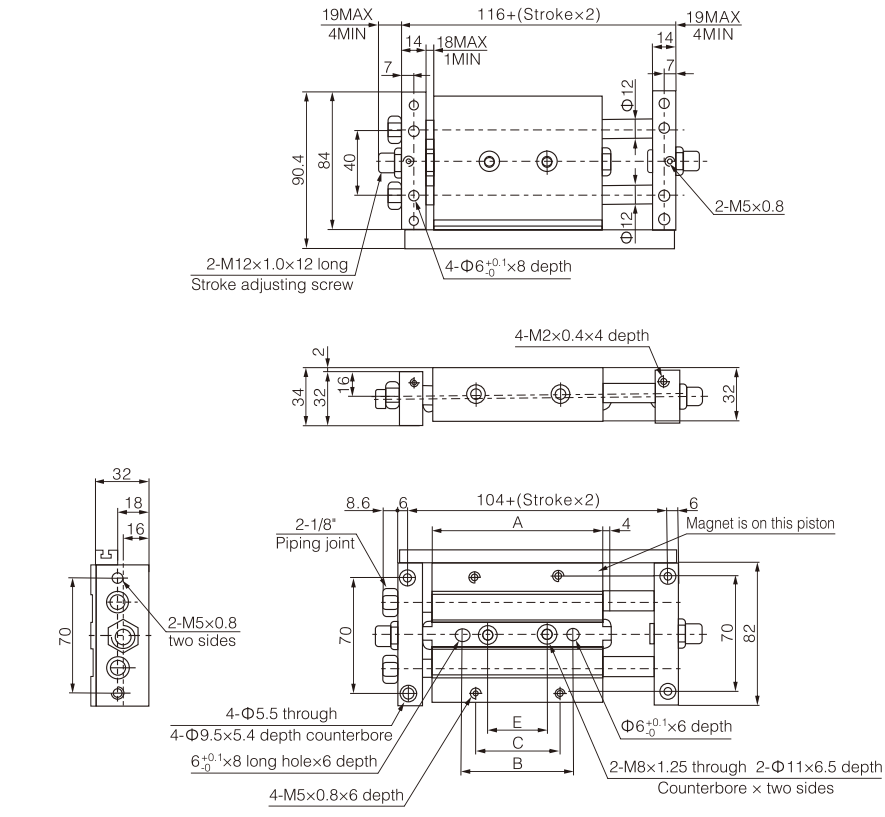


| Stroke/Symbol | A | B | C | E |
|---|---|---|---|---|
| 25 | 101 | 65 | 50 | 35 |
| 50 | 126 | 90 | 50 | 45 |
| 75 | 151 | 115 | 75 | 45 |
| 100 | 176 | 140 | 100 | 70 |
| 125 | 201 | 140 | 100 | 95 |
| 150 | 226 | 140 | 100 | 100 |
| 175 | 251 | 140 | 100 | 100 |
| 200 | 276 | 140 | 100 | 100 |
| 250 | 326 | 140 | 100 | 100 |

1. Linear guide bearing is installed to improve the accuracy of non-rotation of piston rod.
2. Standard built-in magnetic ring can be installed with stroke induction magnetic switch.
3. Gas sources can be connected from three sides.
4. Magnetic switches can be installed on both sides.
5. Standard rubber cushion at both ends.

## Specifications

| Bore size(mm) | 6 | 10 | 16 | 20 |
|---|---|---|---|---|
| Guide bearing width | 5 | 7 | 9 | 12 |
| Use fluid | Air (to be filtered by 40μm filter element) | | | |
| Action mode | Double action | | | |
| Minimum operating pressure | 0.15MPa | 0.06MPa | | 0.05MPa |
| Maximum operating pressure | 0.7MPa | | | |
| Ambient and fluid temperature | Without auto switch: -10 to 70℃ (No freezing)<br>With auto switch: -10 to 60℃ (No freezing) | | | |
| Piston speed (mm/s) | 50~500 | | | |
| Allowable kinetic energy (J) | 0.0125 | 0.025 | 0.05 | 0.1 |
| Lubrication | Non-lube | | | |
| Cushion | Rubber bumper on both ends | | | |
| Stroke length tolerance (mm) | $^{+1.0}_{0}$ | | | |
| Magnetic switch selection | Reed type: D-A9□, Solid state electronic type: D-M9□ | | | |
| Pipe size | M5×0.8 | | | |

Note: If lubrication is required, please use turbine No.1 oil ISO VG32.

## Ordering code

Built-in magnetic ring:

**NMXH 10 – 30 – M9B** □

**Bore size**

| | |
|---|---|
| 6 | 6mm |
| 10 | 10mm |
| 16 | 16mm |
| 20 | 20mm |

**Stroke**

**Magnetic switch**

| | |
|---|---|
| Blank | without magnetic switch |

* See the list of magnetic switches

**Number of magnetic switches**

| | |
|---|---|
| Blank | 2 pcs. |
| S | 1 pc. |

## Stroke/magnetic switch model table

| Bore size (mm) | Standard stroke | Direct mounted magnetic switch |
|---|---|---|
| 6 | 5, 10, 15, 20, 25, 30, 40, 50, 60 | M9B(V)<br>M9N(V)<br>M9P(V) |
| 10 | | |
| 15 | | |
| 20 | | |

Note: The specifications and characteristics of magnetic switches can be referred to the series of magnetic switches.
Wire length representation mark: no mark-0.5m, L-3m, Z-5m,
Example: M9NL.

Small linear guide bearing improve the accuracy of linear motion of the cylinder

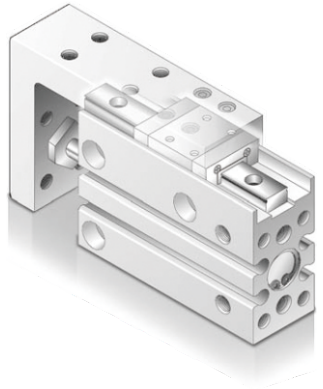

Piping is possible in 3 directions.

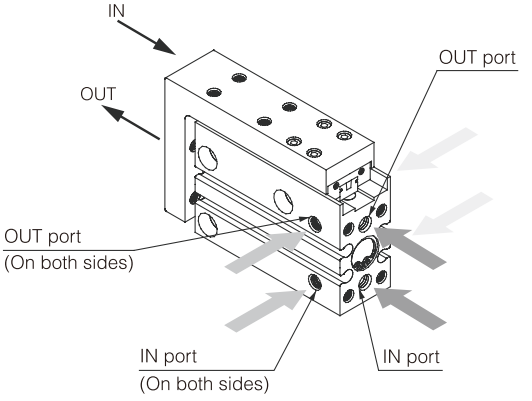


## Application

Parallel distributor

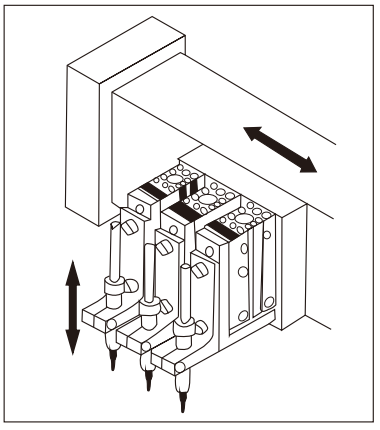

Workpiece delivery

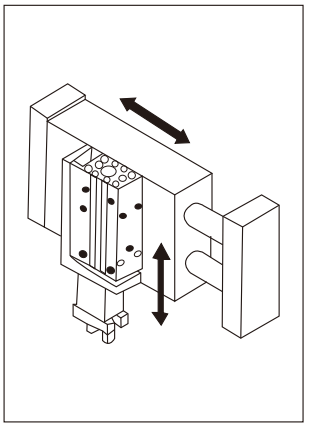

Cooperate with vacuum sucker

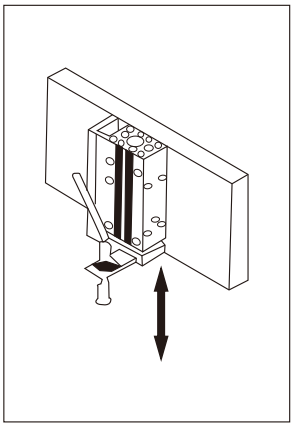

Pinhole locator

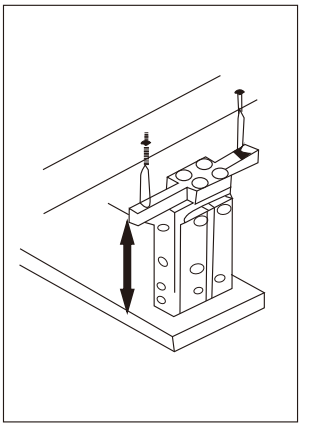

## Dimensions

### NMXH6

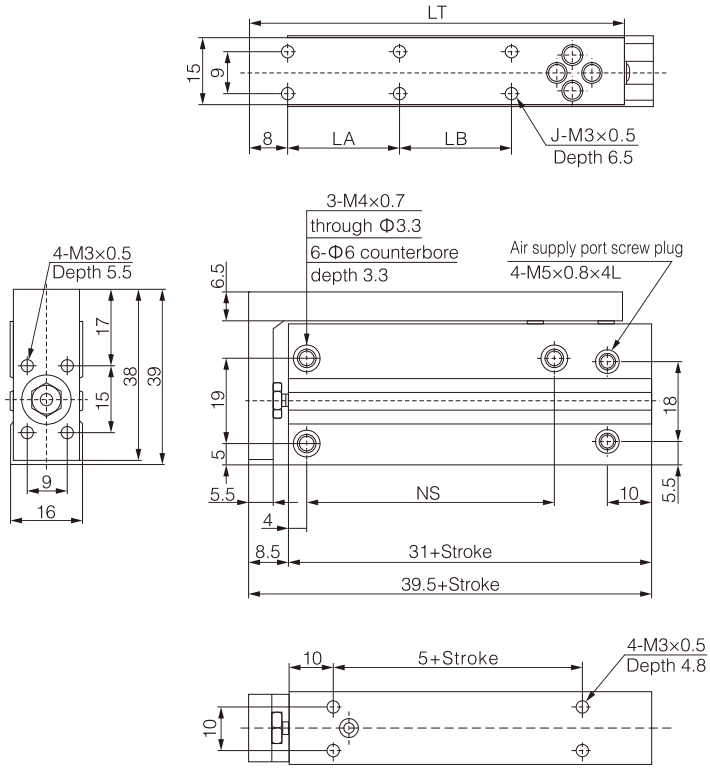


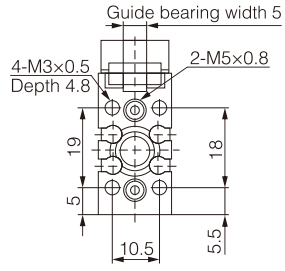


| Stroke/Symbol | J | LA | LB | LT | NS |
|---|---|---|---|---|---|
| 5 | 4 | 10 | - | 42 | 14 |
| 10 | 4 | 10 | - | 42 | 14 |
| 15 | 4 | 20 | - | 52 | 24 |
| 20 | 4 | 20 | - | 52 | 24 |
| 25 | 4 | 30 | - | 62 | 30 |
| 30 | 4 | 30 | - | 62 | 30 |
| 40 | 6 | 20 | 20 | 72 | 45 |
| 50 | 6 | 25 | 25 | 82 | 55 |
| 60 | 6 | 30 | 30 | 92 | 60 |

### NMXH10

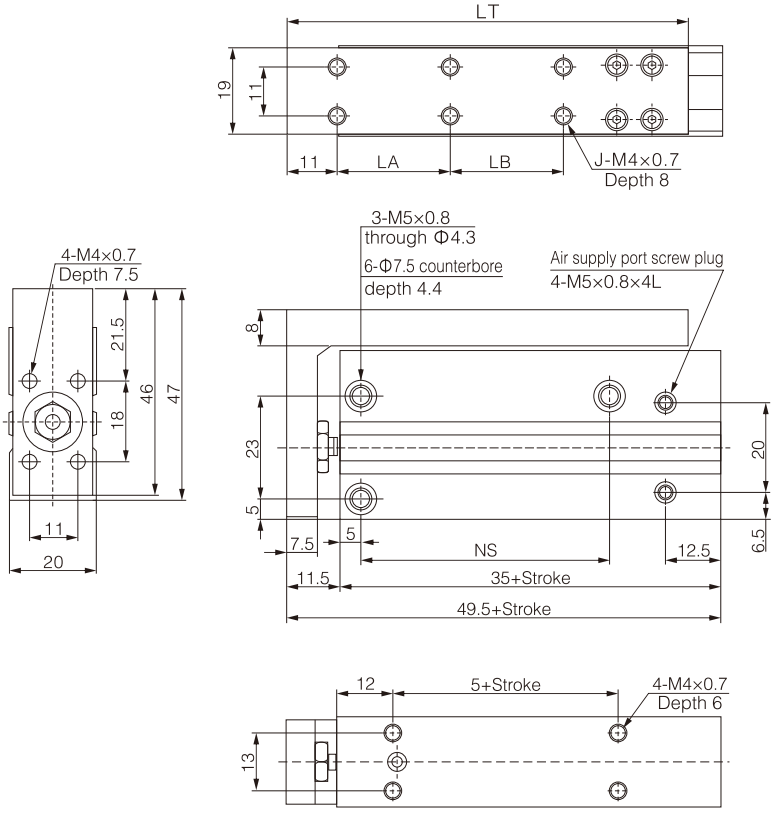


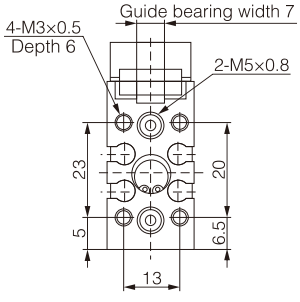


| Stroke/Symbol | J | LA | LB | LT | NS |
|---|---|---|---|---|---|
| 5 | 4 | 10 | - | 49 | 14 |
| 10 | 4 | 10 | - | 49 | 14 |
| 15 | 4 | 20 | - | 59 | 24 |
| 20 | 4 | 20 | - | 59 | 24 |
| 25 | 4 | 30 | - | 69 | 30 |
| 30 | 4 | 30 | - | 69 | 30 |
| 40 | 6 | 20 | 20 | 79 | 45 |
| 50 | 6 | 25 | 25 | 89 | 55 |
| 60 | 6 | 30 | 30 | 99 | 60 |

## NMXH16

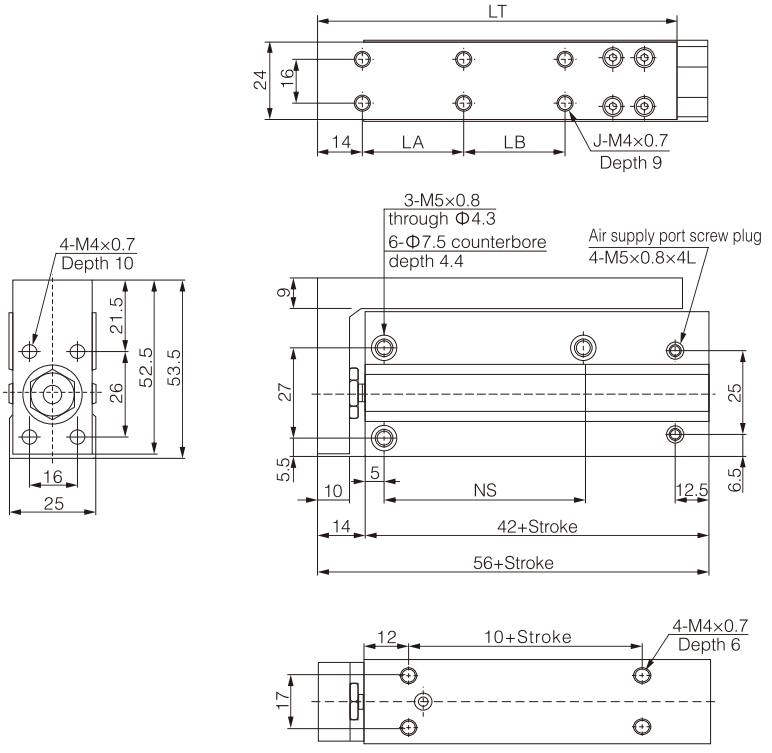


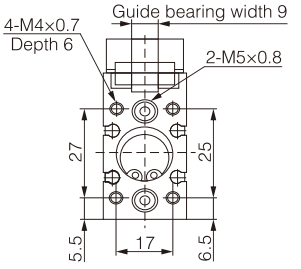


| Stroke/Symbol | J | LA | LB | LT | NS |
|---|---|---|---|---|---|
| 5 | 4 | 10 | - | 58 | 20 |
| 10 | 4 | 10 | - | 58 | 20 |
| 15 | 4 | 20 | - | 68 | 30 |
| 20 | 4 | 20 | - | 68 | 30 |
| 25 | 4 | 30 | - | 78 | 40 |
| 30 | 4 | 30 | - | 78 | 40 |
| 40 | 6 | 20 | 20 | 88 | 50 |
| 50 | 6 | 25 | 25 | 98 | 60 |
| 60 | 6 | 30 | 30 | 108 | 60 |

## NMXH20

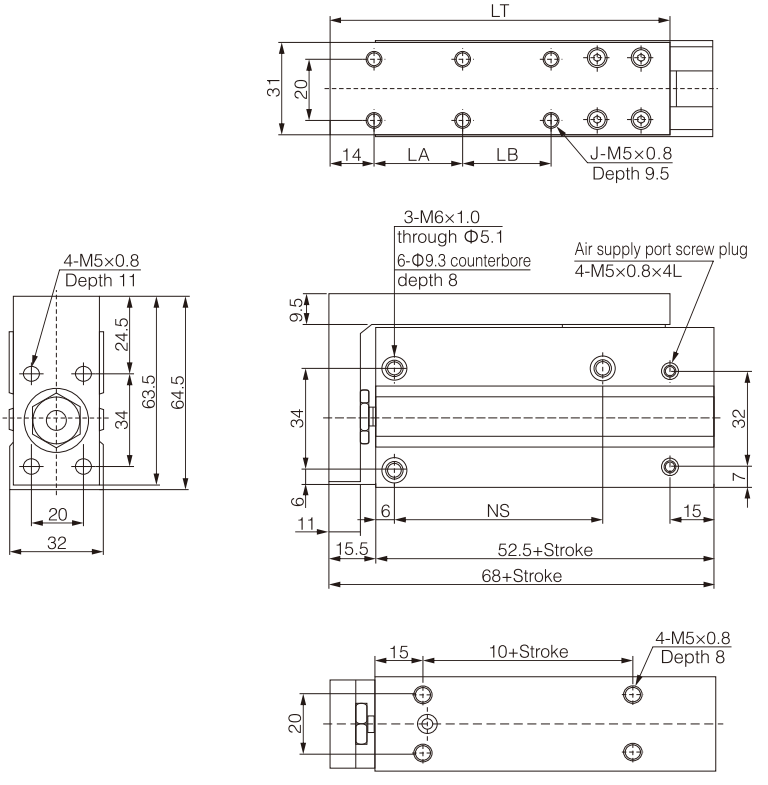


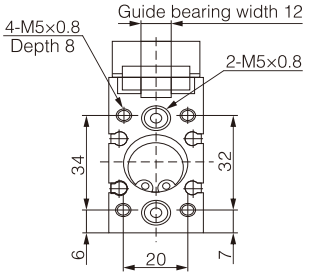


| Stroke/Symbol | J | LA | LB | LT | NS |
|---|---|---|---|---|---|
| 5 | 4 | 10 | - | 64 | 20 |
| 10 | 4 | 10 | - | 64 | 20 |
| 15 | 4 | 20 | - | 74 | 30 |
| 20 | 4 | 20 | - | 74 | 30 |
| 25 | 4 | 30 | - | 84 | 40 |
| 30 | 4 | 30 | - | 84 | 40 |
| 40 | 6 | 20 | 20 | 94 | 50 |
| 50 | 6 | 25 | 25 | 104 | 70 |
| 60 | 6 | 30 | 30 | 114 | 70 |

1. Optional with adjustable stroke device (0-5mm).
2. Double cylinder design, 2 times output force, thin volume.
3. Cylinder is combined with the worktable, reduce the overall size.
4. Cross roller guide design, small friction, no gap between cylinder and table, suitable for precise assembly.
5. It can be installed from three sides.
6. Built in magnetic ring type, magnetic switch can be installed.

## Specifications

| Model | NMXS6 | NMXS8 | NMXS12 | NMXS16 | NMXS20 | NMXS25 |
|---|---|---|---|---|---|---|
| Bore size | Φ6×2 (Equate to Φ8) | Φ8×2 (Equate to Φ11) | Φ12×2 (Equate to Φ17) | Φ16×2 (Equate to Φ22) | Φ20×2 (Equate to Φ28) | Φ25×2 (Equate to Φ35) |
| Use fluid | Air (to be filtered by 40μm filter element) | | | | | |
| Action mode | Double action | | | | | |
| Minimum operating pressure | 0.15MPa | | | | | |
| Maximum operating pressure | 0.7MPa | | | | | |
| Ambient and fluid temperature | -10 to 60℃ (No freezing) | | | | | |
| Piston speed (mm/s) | 50~500 | | | | | |
| Lubrication | Rubber cushion (standard) | | | | | |
| Cushion | Non-lube | | | | | |
| Pipe size | M3×0.5 | M5×0.8 | | | M3×0.5 | |

Note: If lubrication is required, please use turbine No.1 oil ISO VG32.

## Selection table

| NMXS Series | Bore size (mm) | Standard stroke (mm) 10 | 20 | 30 | 40 | 50 | 75 | 100 | 125 | 150 | Function options: Stroke adjuster device (0~5mm) | Spring buffer | With end lock | Axial piping type | Magnetic switch model: Direct installation |
|---|---|---|---|---|---|---|---|---|---|---|---|---|---|---|---|
| | Φ6×2 | ● | ● | ● | ● | ● | ● | | | | ● | ● | ● | ● | M9N(V) M9B(V) M9P(V) |
| | Φ8×2 | ● | ● | ● | ● | ● | ● | | | | ● | ● | ● | ● | |
| | Φ12×2 | ● | ● | ● | ● | ● | ● | ● | | | ● | ● | ● | ● | |
| | Φ16×2 | ● | ● | ● | ● | ● | ● | ● | ● | | ● | ● | ● | ● | |
| | Φ20×2 | ● | ● | ● | ● | ● | ● | ● | ● | ● | ● | ● | ● | ● | |
| | Φ25×2 | ● | ● | ● | ● | ● | ● | ● | ● | ● | ● | ● | ● | ● | |

Note: The specifications and characteristics of magnetic switches can be referred to the series of magnetic switches.
Wire length representation mark: no mark -0.5m, L-3m, Z-5m, Example: M9N, M9NL

## Ordering code

**NMXS 12 – 50 □ □ – M9N □**

- 12: Bore size
- 50: Stroke

**Adjusting device**

| | |
|---|---|
| Blank | Without adjuster |
| AS | Adjuster on extension end |
| AT | Adjuster on retraction end |
| A | Adjuster on both ends |
| *BS | Absorber on extension end |
| *BT | Absorber on retraction end |
| *B | Absorber on both ends |

* NMXS6 without hydraulic buffer

**Functional option**

| | |
|---|---|
| Blank | Standard |
| F | With buffer |
| *R | With end lock |
| P | Axial piping type |
| *FR | With buffer and end lock |
| FP | With buffer, Axial piping type |

* NMXS6 without end lock

**Magnetic switch**

| | |
|---|---|
| Blank | without magnetic switch |

* Refer to the above table for the model of magnetic switch

**Number of magnetic switches**

| | |
|---|---|
| Blank | 2 pcs. |
| S | 1 pc. |
| n | n pcs. |

## Cylinder and table combination

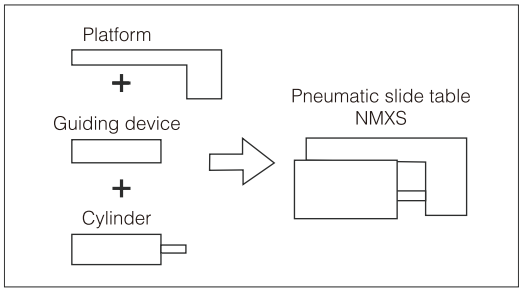


## High precision, robust applications

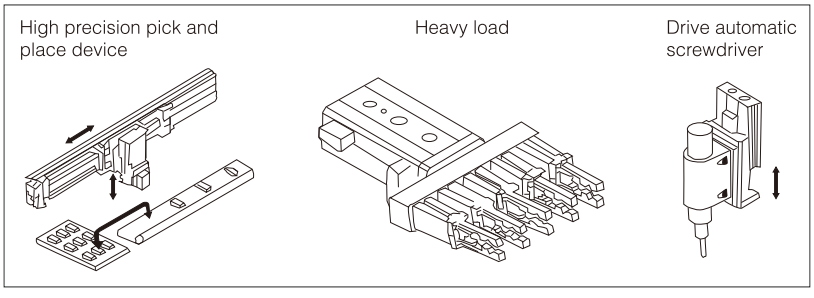

## Selection method of pneumatic slide table

| Model Selection Steps | Formula/Data | Selection Examples |
|---|---|---|

### 1 Operating Conditions

Consider the installation posture and workpiece shape, and list the use conditions.

- Model to be used
- Type of cushion
- Workpiece mounting position
- Mounting orientation
- Average operating speed Va (mm/s)
- Load mass W (kg): Fig. (1)
- Overhang Ln (mm): Fig. (2)

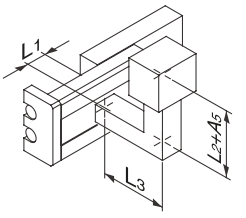


Cylinder: NMXS16-50
Cushion: Rubber bumper
Workpiece table mounting
Mounting: Horizontal wall mounting
Average operating speed:
Va=300[mm/s]
Load mass: W=1[kg]
L1=10mm
L2=30mm
L3=30mm

### 2 Kinetic Energy

Find the kinetic energy E (J) of the load.

$E=\frac{1}{2}\cdot W(\frac{V}{1000})^2$

Collision speed $V=\underline{1.4}\cdot Va$ ※

※) Correction factor (Reference values)

$E=\frac{1}{2}\cdot 1(\frac{420}{1000})^2=0.088$

V=1.4×300=420

Find the allowable kinetic energy Ea (J).

Ea = K・Emax
Workpiece mounting coefficient K: Fig.(3)
Max. allowable kinetic energy Emax: Table (1)

Ea=1・0.11=0.11

Confirm that the kinetic energy of the load does not exceed the allowable kinetic energy.

Kinetic energy (E) ≤ Allowable kinetic energy (Ea)

Can be used based on E=0.088 ≤ Ea=0.11

### 3 Load Factor

#### 3-1 Load Factor of Load Mass

Find the allowable load mass Wa (kg).

Wa = K・β・Wmax
Workpiece mounting coefficient K: Fig. (3)
Allowable load mass coefficient β: Graph (1)
Max. allowable load mass Wmax: Table (2)

Wa=1×1×4=4
K=1
β=1
Wmax=4

Find the load factor of the load mass α1.

α1 = W/Wa

α1=1/4=0.25

#### 3-2 Load Factor of Static Moment

Find the static moment M (N・m).

M=W×9.8(Ln+An)/1000
Correction value of moment center position distance An: Table (3)

**Yawing**

Examine My.
My=1×9.8(10+30)/1000=0.39
A3=30

**Rolling**

Examine Mr.
Mr=1×9.8(30+10)/1000=0.39
A6=10

Find the allowable static moment Ma (N・m).

Ma=K・γ・Mmax
Workpiece mounting coefficient K: Fig. (3)
Allowable moment coefficient γ: Graph (2)
Maximum allowable moment Mmax: Table (4)

May=1×1×15.9=15.9
Mymax=15.9
K=1
γ=1

Mar=15.9(Same value as May)

Find the load factor α2 of the static moment.

α2=M/Ma

α2=0.39/15.9=0.025

α'2=0.39/15.9=0.025

#### 3-3 Load Factor of Dynamic Moment

Find the dynamic moment Me (N・m).

$Me=1/3\cdot We\times 9.8\frac{(Ln+An)}{1000}$

Collision equivalent to impact We = δ·W·V
δ: Bumper coefficient
With urethane bumper (Standard) = 4/100
With shock absorber = 1/100
Correction value of moment center position distance An: Table (3)

**Pitching** Examine Mep.

$Mep=1/3\times 16.8\times 9.8\times\frac{(30+10)}{1000}=2.2$

We=4/100 ×1×420=16.8
A2=10
Meap=1×0.7×15.9=11.1
K=1
γ=0.7
Mpmax=15.9
α3=2.2/11.1=0.20

Find the allowable dynamic moment Mea (N・m).

Mea = K・γ・Mmax
Workpiece mounting coefficient K: Fig. (3)
Allowable moment coefficient γ: Graph (2)
Max. allowable moment Mmax: Table (4)

**Yawing** Examine Mey.

$Mey=1/3\times 6.8\times 9.8\times\frac{(30+31)}{1000}=3.3$

We=16.8
A4=31
Meay=11.1(Same value as Meap)
α'3=3.3/11.1=0.30

Find the load factor α3 of the dynamic moment.

α3=Me/Mea

#### 3-4 Sum of Load Factors

Possible to use if the sum of the load factors does not exceed 1.

∑αn=α1+α2+α3≤1

∑αn=α1+α2+α'2+α3+α'3
=0.25+0.025+0.025+0.20+0.30=0.80≤1
And it is possible to use.

Fig. (1) Load Mass: W (kg)

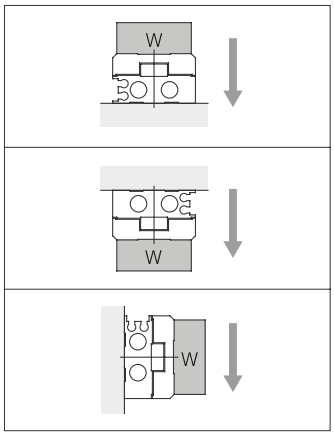


Fig. (2) Overhang: Ln (mm), Correction Value of Moment Center Position Distance: An (mm)

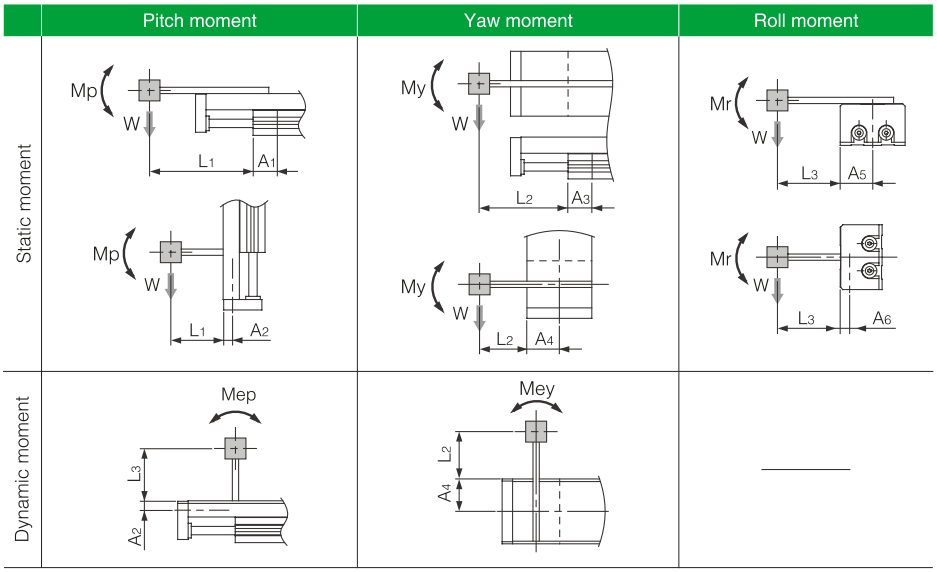


Note: Static moment: Moment generated by gravity
Dynamic moment: Moment generated by impact when colliding with stopper

Fig. (3) Workpiece Mounting Coefficient: K

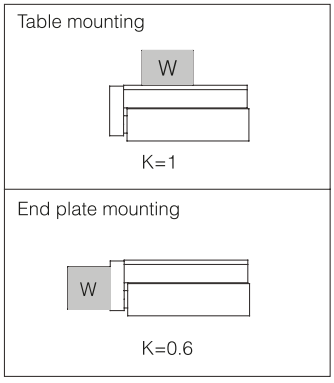


Table (1) Maximum Allowable Kinetic Energy: Emax (J)

| Model | Allowable kinetic energy | |
|---|---|---|
| | Rubber bumper | Shock absorber |
| NMXS6 | 0.018 | - |
| NMXS8 | 0.027 | 0.054 |
| NMXS12 | 0.055 | 0.11 |
| NMXS16 | 0.11 | 0.22 |
| NMXS20 | 0.16 | 0.32 |
| NMXS25 | 0.24 | 0.48 |

Graph (1) Allowable Load Mass Coefficient: β

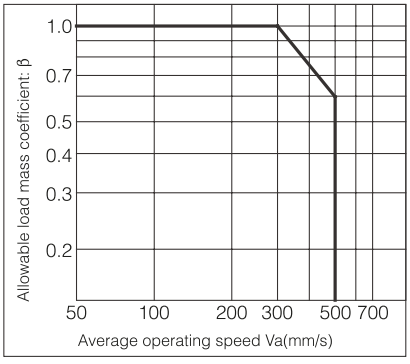


Table (2) Maximum Allowable Load Mass: Wmax (kg)

| Model | Maximum allowable load mass |
|---|---|
| NMXS6 | 0.6 |
| NMXS8 | 1 |
| NMXS12 | 2 |
| NMXS16 | 4 |
| NMXS20 | 6 |
| NMXS25 | 9 |

Table (3) Correction Value of Moment Center Position Distance: An (mm)

| Model | Correction value of moment center position distance (Refer to Figure 2) | | | | | |
|---|---|---|---|---|---|---|
| | A1 | A2 | A3 | A4 | A5 | A6 |
| NMXS6 | 11 | 6 | 13 | 16 | 16 | 6 |
| NMXS8 | 11 | 7.5 | 13 | 20 | 20 | 7.5 |
| NMXS12 | 24 | 8.5 | 26 | 25 | 25 | 8.5 |
| NMXS16 | 27 | 10 | 30 | 31 | 31 | 10 |
| NMXS20 | 34 | 14.5 | 36 | 38 | 38 | 14.5 |
| NMXS25 | 42 | 19 | 44 | 46 | 46 | 19 |

Graph (2) Allowable Moment Coefficient: γ

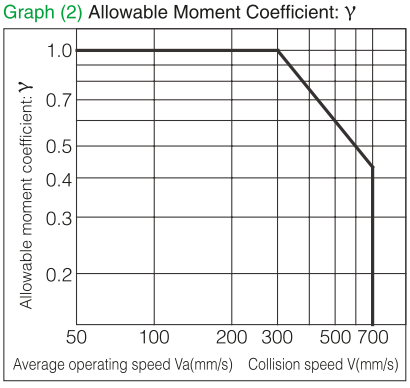


Note: Use the average operating speed when calculating static moment.
Use the collision speed when calculating dynamic moment.

Table (4) Maximum Allowable Moment: Mmax (N·m)

| Model | Stroke (mm) | | | | | | | | |
|---|---|---|---|---|---|---|---|---|---|
| | 10 | 20 | 30 | 40 | 50 | 75 | 100 | 125 | 150 |
| NMXS6 | 0.7 | 1.0 | 1.2 | 1.2 | 1.2 | - | - | - | - |
| NMXS8 | 2.0 | 2.0 | 2.8 | 3.6 | 4.2 | 4.2 | - | - | - |
| NMXS12 | 4.2 | 4.2 | 4.2 | 5.8 | 7.0 | 10.0 | 10.0 | - | - |
| NMXS16 | 11.3 | 11.3 | 11.3 | 11.3 | 15.9 | 25.0 | 34.1 | 34.1 | - |
| NMXS20 | 19.4 | 19.4 | 19.4 | 19.4 | 27.2 | 35.0 | 50.5 | 50.5 | 50.5 |
| NMXS25 | 30.6 | 30.6 | 30.6 | 30.6 | 42.8 | 55.1 | 67.3 | 67.3 | 67.3 |

Symbol

| Symbol | Definition | Unit |
|---|---|---|
| An (n=1 to 6) | Correction value of moment center position distance | mm |
| E | Kinetic energy | J |
| Ea | Allowable kinetic energy | J |
| Emax | Max. allowable kinetic energy | J |
| Ln (n=1 to 3) | Overhang | mm |
| M (Mp, My, Mr) | Static moment (Pitch, Yaw, Roll) | N·m |
| Ma (Map, May, Mar) | Allowable static moment (Pitch, Yaw, Roll) | N·m |
| Me (Mep, Mey) | Dynamic moment (Pitch, Yaw) | N·m |
| Mea (Meap, Meay) | Allowable dynamic moment (Pitch, Yaw) | N·m |
| Mmax (Mpmax, Mymax, Mrmax) | Max. allowable moment (Pitch, Yaw, Roll) | N·m |
| V | Collision speed | mm/s |

| Symbol | Definition | Unit |
|---|---|---|
| Va | Average operating speed | mm/s |
| W | Load mass | kg |
| Wa | Allowable load mass | kg |
| We | Mass equivalent to impact | kg |
| Wmax | Max. allowable load mass | kg |
| α | Load factor | - |
| β | Allowable load mass coefficient | - |
| γ | Allowable moment coefficient | - |
| δ | Damper coefficient | - |
| K | Workpiece mounting coefficient | - |

## Dimensions

**NMXS 6**

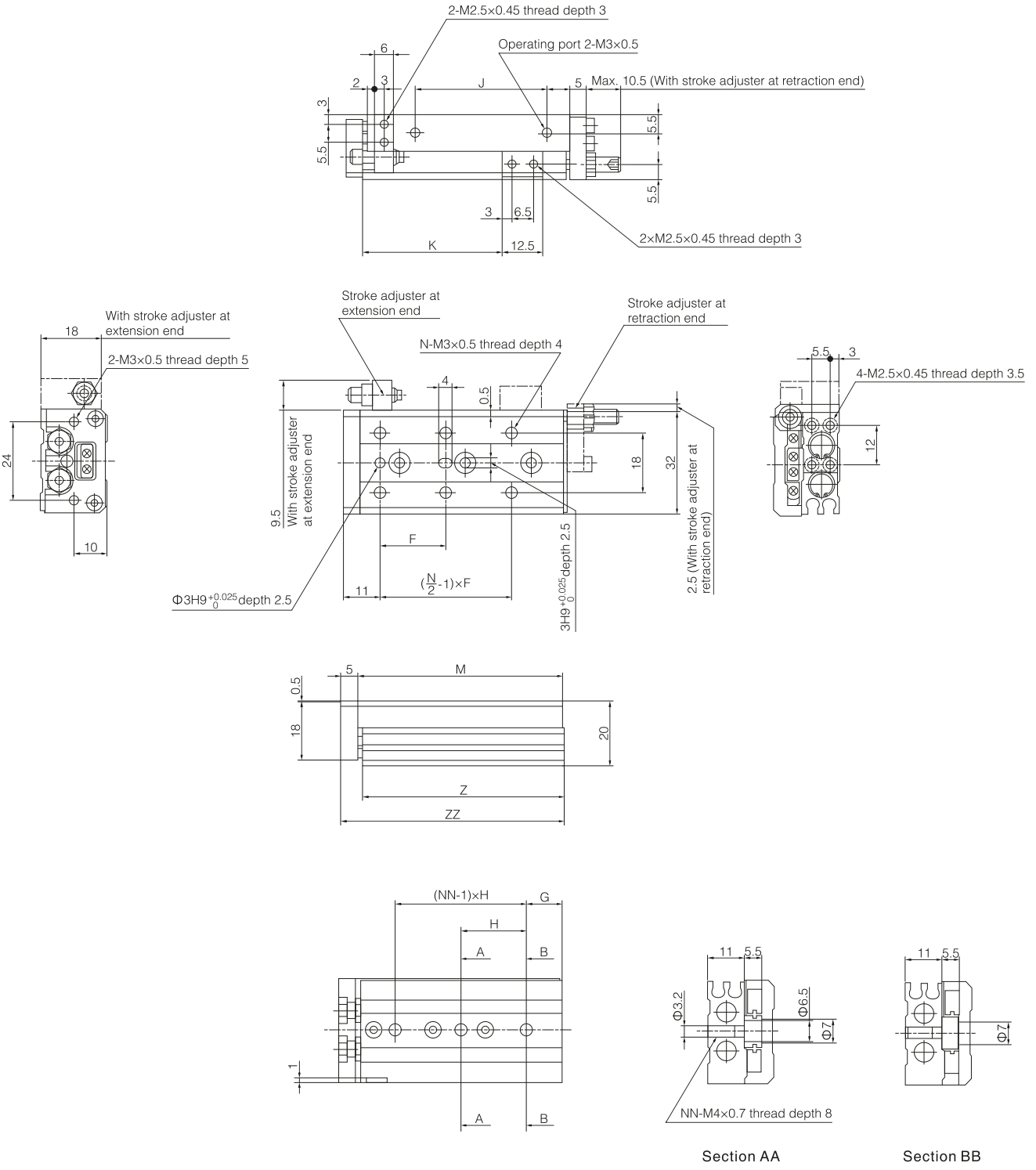


| Model | F | N | G | H | NN | I | J | K | M | Z | ZZ |
|---|---|---|---|---|---|---|---|---|---|---|---|
| NMXS6-10 | 20 | 4 | 6 | 25 | 2 | 10 | 17 | 22.5 | 42 | 41.5 | 48 |
| NMXS6-20 | 30 | 4 | 6 | 35 | 2 | 10 | 27 | 32.5 | 52 | 51.5 | 58 |
| NMXS6-30 | 20 | 6 | 11 | 20 | 3 | 7 | 40 | 42.5 | 62 | 61.5 | 68 |
| NMXS6-40 | 28 | 6 | 13 | 30 | 3 | 19 | 50 | 52.5 | 84 | 83.5 | 90 |
| NMXS6-50 | 38 | 6 | 17 | 24 | 4 | 25 | 60 | 62.5 | 100 | 99.5 | 106 |

**NMXS 8**

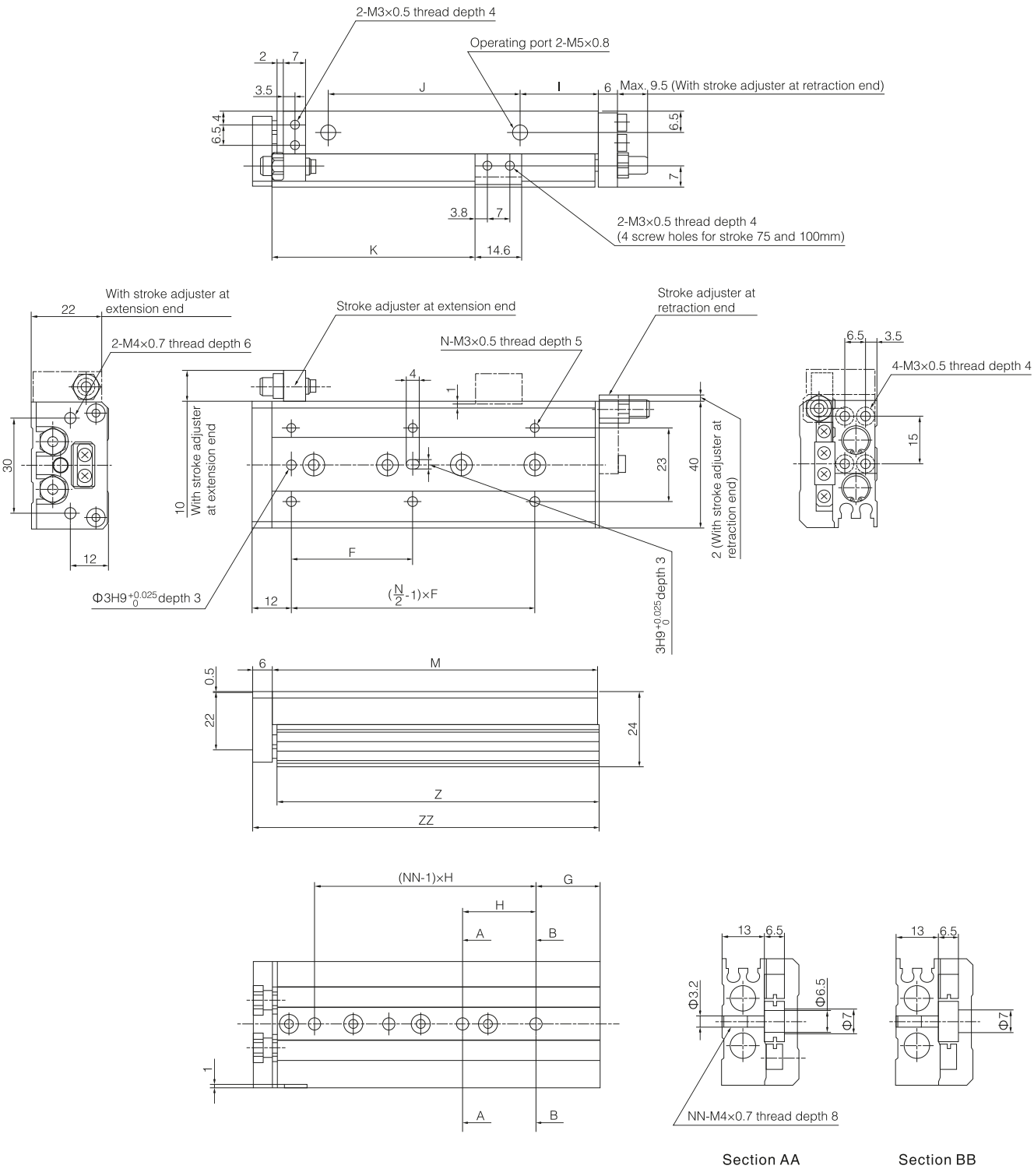


| Model | F | N | G | H | NN | I | J | K | M | Z | ZZ |
|---|---|---|---|---|---|---|---|---|---|---|---|
| NMXS8-10 | 25 | 4 | 9 | 28 | 2 | 13 | 19.5 | 23.5 | 49 | 48.5 | 56 |
| NMXS8-20 | 25 | 4 | 12 | 30 | 2 | 8.5 | 29 | 33.5 | 54 | 53.5 | 61 |
| NMXS8-30 | 40 | 4 | 13 | 20 | 3 | 9.5 | 39 | 43.5 | 65 | 64.5 | 72 |
| NMXS8-40 | 50 | 4 | 15 | 28 | 3 | 10.5 | 56 | 53.5 | 83 | 82.5 | 90 |
| NMXS8-50 | 38 | 6 | 20 | 23 | 4 | 24.5 | 60 | 63.5 | 101 | 100.5 | 108 |
| NMXS8-75 | 50 | 6 | 27 | 28 | 5 | 38.5 | 96 | 88.5 | 151 | 150.5 | 158 |

Cylinder
SC
SC(Big)
SCT
SCF
SU
SUF
SI
SIF
DNC
QGB
QGBZ
NCQ2
NCQ2(Big)
NCQ2(Long)
NCQS
NCQM
NRQ
SDA
ADVU
ACE(AND)
MAL
MA
MI
NCM2
NCJ2
NCG1
NCJP
TD
TN(TDA)
NCXS
NCXSW
NMGP
NMGG
NCU
NCUJ
NCY3B
NCY3R
NCY1S
NCY1L
STM
NMXH
NMXS
NMXQ
NMHZ2
NMHC2
NMHL2
NMHY2
NMHT2
NMHW2
NMHF2
NMHS2
NMHS3
NMHS4
NMRHQ
NMSQ
NCRA1
NCRQ2
NCRB2
ACK
SRC
QCK
NCK1

**NMXS 12**

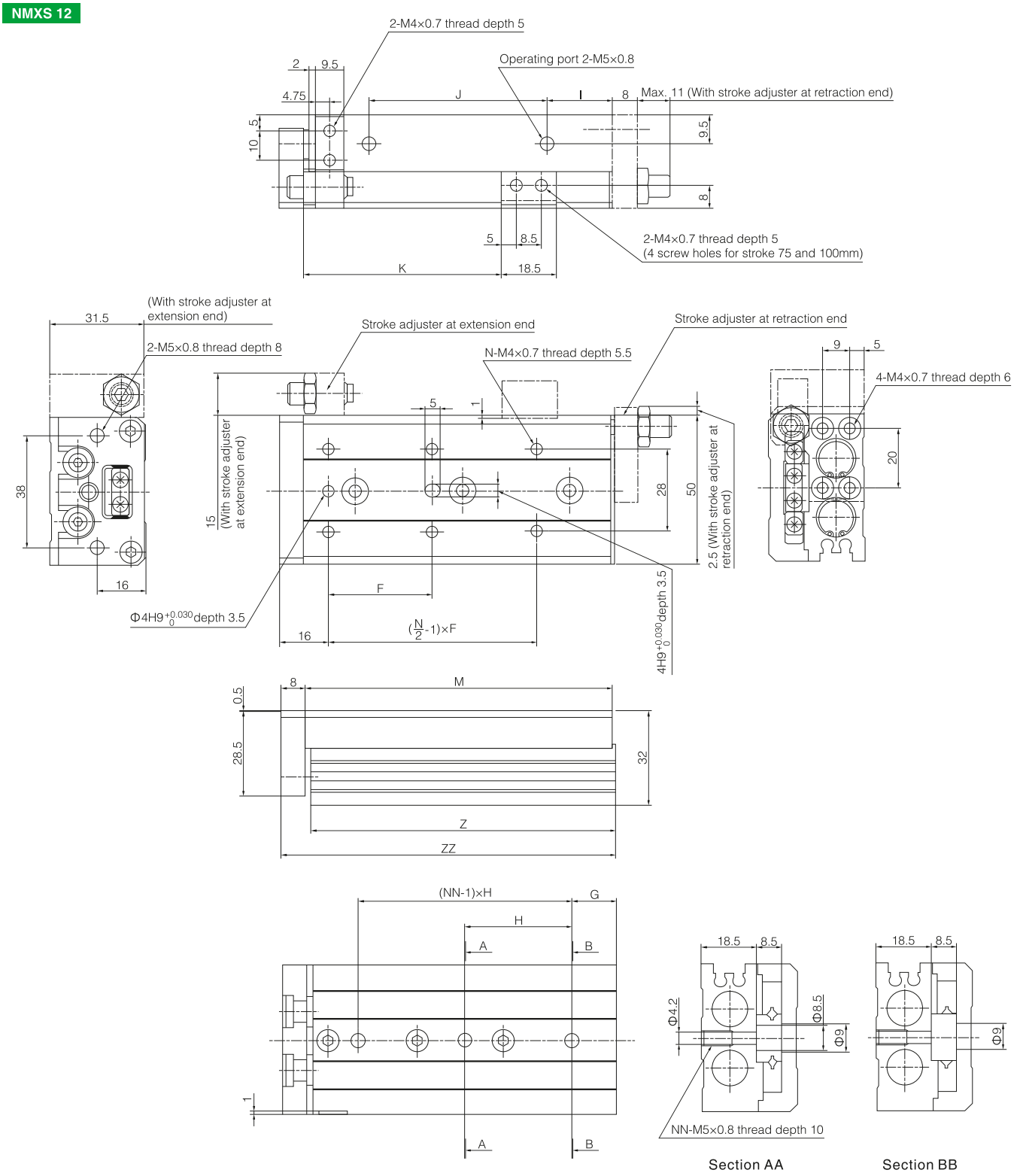


| Model | F | N | G | H | NN | I | J | K | M | Z | ZZ |
|---|---|---|---|---|---|---|---|---|---|---|---|
| NMXS12-10 | 35 | 4 | 15 | 40 | 2 | 10 | 40 | 26.5 | 71 | 70 | 80 |
| NMXS12-20 | 35 | 4 | 15 | 40 | 2 | 10 | 40 | 36.5 | 71 | 70 | 80 |
| NMXS12-30 | 35 | 4 | 15 | 40 | 2 | 10 | 40 | 46.5 | 71 | 70 | 80 |
| NMXS12-40 | 50 | 4 | 17 | 25 | 3 | 10 | 52 | 56.5 | 83 | 82 | 92 |
| NMXS12-50 | 35 | 6 | 15 | 36 | 3 | 22 | 60 | 66.5 | 103 | 102 | 112 |
| NMXS12-75 | 55 | 6 | 25 | 36 | 4 | 43 | 85 | 91.5 | 149 | 148 | 158 |
| NMXS12-100 | 65 | 6 | 35 | 38 | 5 | 52 | 130 | 116.5 | 203 | 202 | 212 |

**NMXS 16**

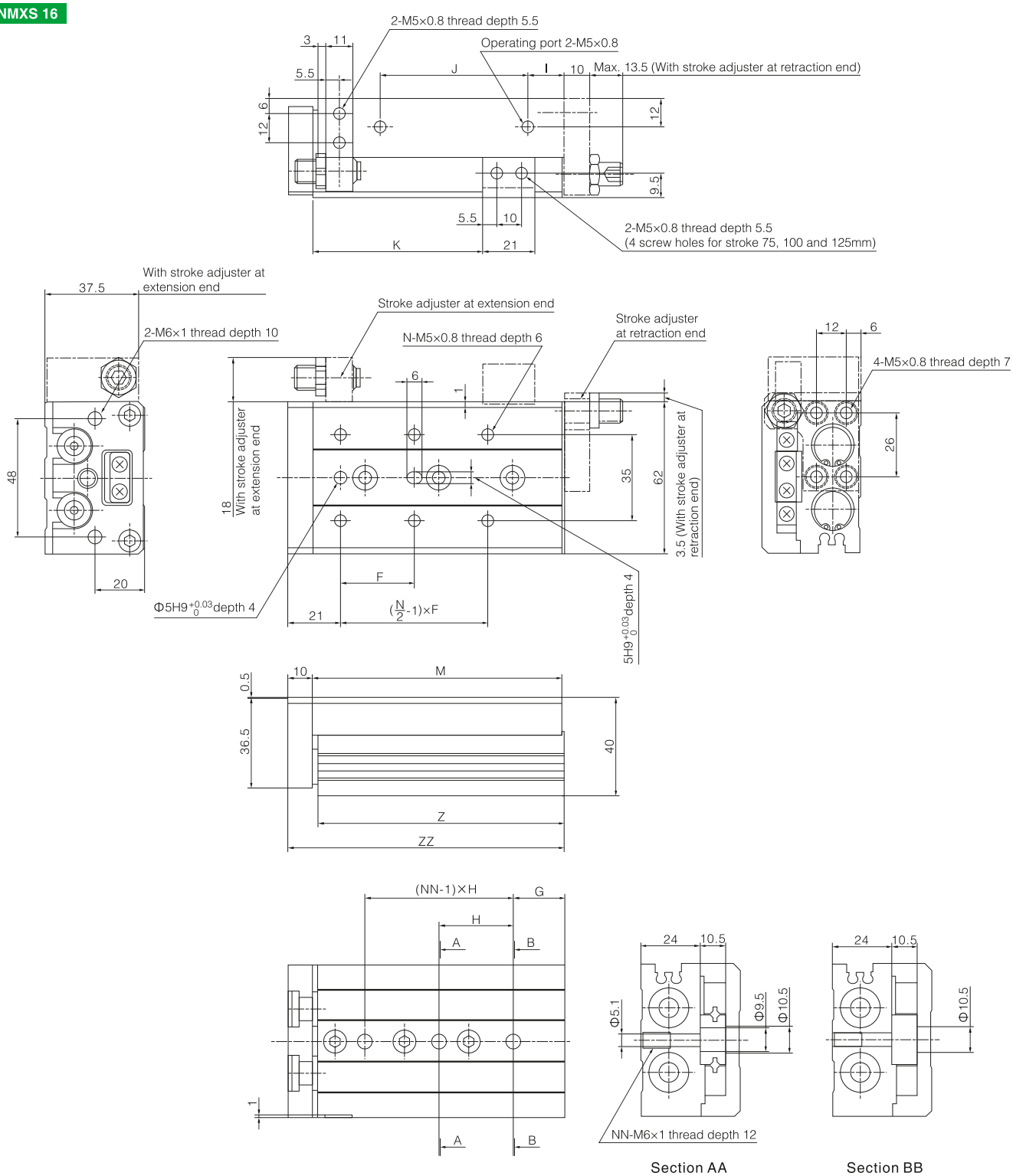


| Model | F | N | G | H | NN | I | J | K | M | Z | ZZ |
|---|---|---|---|---|---|---|---|---|---|---|---|
| NMXS16-10 | 35 | 4 | 16 | 40 | 2 | 10 | 40 | 29 | 76 | 75 | 87 |
| NMXS16-20 | 35 | 4 | 16 | 40 | 2 | 10 | 40 | 39 | 76 | 75 | 87 |
| NMXS16-30 | 35 | 4 | 16 | 40 | 2 | 10 | 40 | 49 | 76 | 75 | 87 |
| NMXS16-40 | 40 | 4 | 16 | 50 | 2 | 10 | 50 | 59 | 86 | 85 | 97 |
| NMXS16-50 | 30 | 6 | 21 | 30 | 3 | 15 | 60 | 69 | 101 | 100 | 112 |
| NMXS16-75 | 55 | 6 | 26 | 35 | 4 | 40 | 85 | 94 | 151 | 150 | 162 |
| NMXS16-100 | 65 | 6 | 39 | 35 | 5 | 55 | 118 | 119 | 199 | 198 | 210 |
| NMXS16-125 | 70 | 8 | 19 | 35 | 7 | 68 | 155 | 144 | 249 | 248 | 260 |

**NMXS 20**

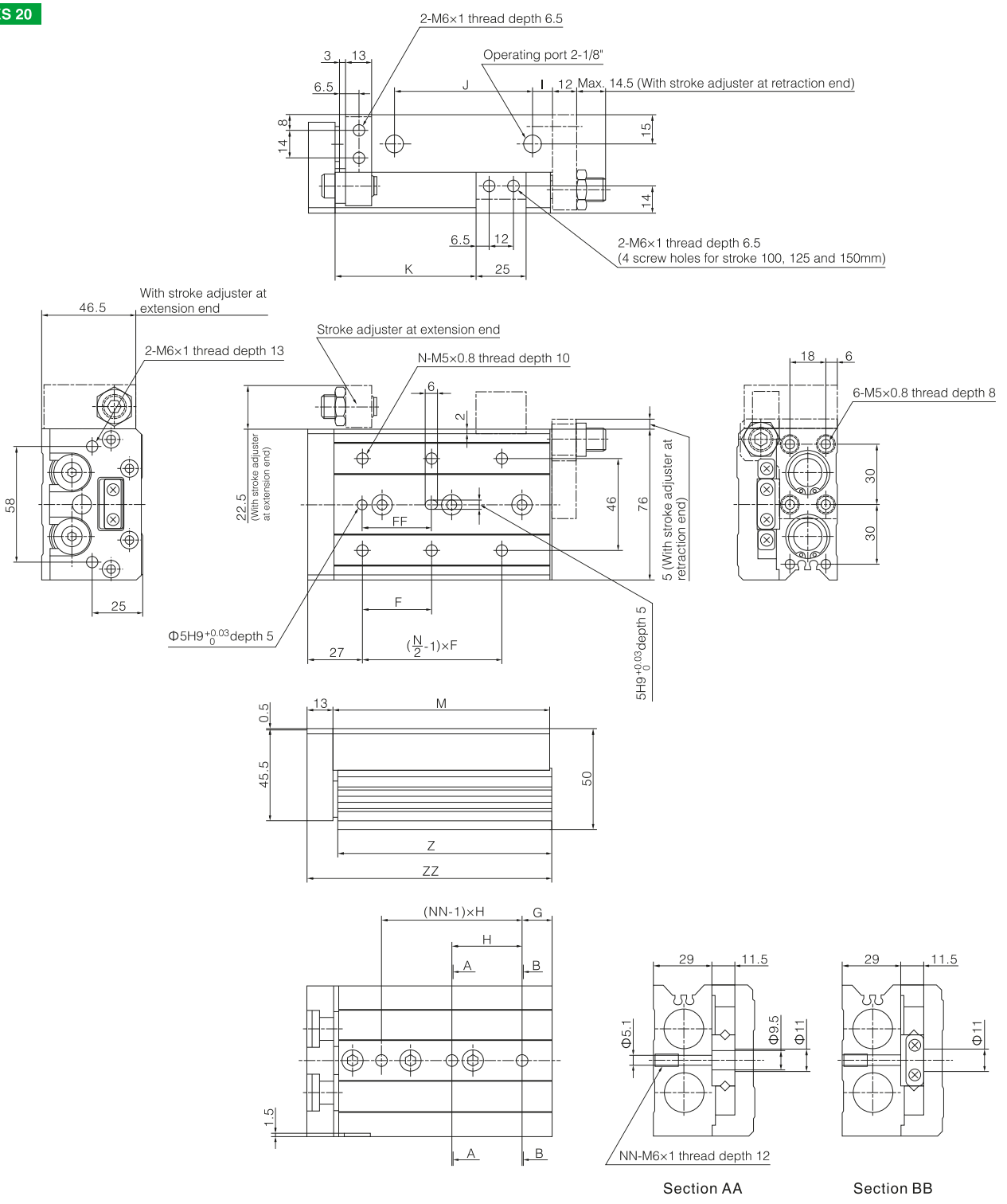


| Model | F | FF | N | G | H | NN | I | J | K | M | Z | ZZ |
|---|---|---|---|---|---|---|---|---|---|---|---|---|
| NMXS20-10 | 50 | 40 | 4 | 15 | 45 | 2 | 10 | 44 | 31 | 83 | 81.5 | 97 |
| NMXS20-20 | 50 | 40 | 4 | 15 | 45 | 2 | 10 | 44 | 41 | 83 | 81.5 | 97 |
| NMXS20-30 | 50 | 40 | 4 | 15 | 45 | 2 | 10 | 44 | 51 | 83 | 81.5 | 97 |
| NMXS20-40 | 60 | 50 | 4 | 15 | 55 | 2 | 10 | 54 | 61 | 93 | 91.5 | 107 |
| NMXS20-50 | 35 | 35 | 6 | 15 | 35 | 3 | 10 | 69 | 71 | 108 | 106.5 | 122 |
| NMXS20-75 | 60 | 60 | 6 | 19 | 35 | 4 | 10 | 108 | 96 | 147 | 145.5 | 161 |
| NMXS20-100 | 70 | 70 | 6 | 37 | 35 | 5 | 58 | 113 | 121 | 200 | 198.5 | 214 |
| NMXS20-125 | 70 | 70 | 8 | 41 | 38 | 6 | 70 | 155 | 146 | 254 | 252.5 | 268 |
| NMXS20-150 | 80 | 80 | 8 | 19 | 44 | 7 | 87 | 190 | 171 | 306 | 304.5 | 320 |

**NMXS 25**

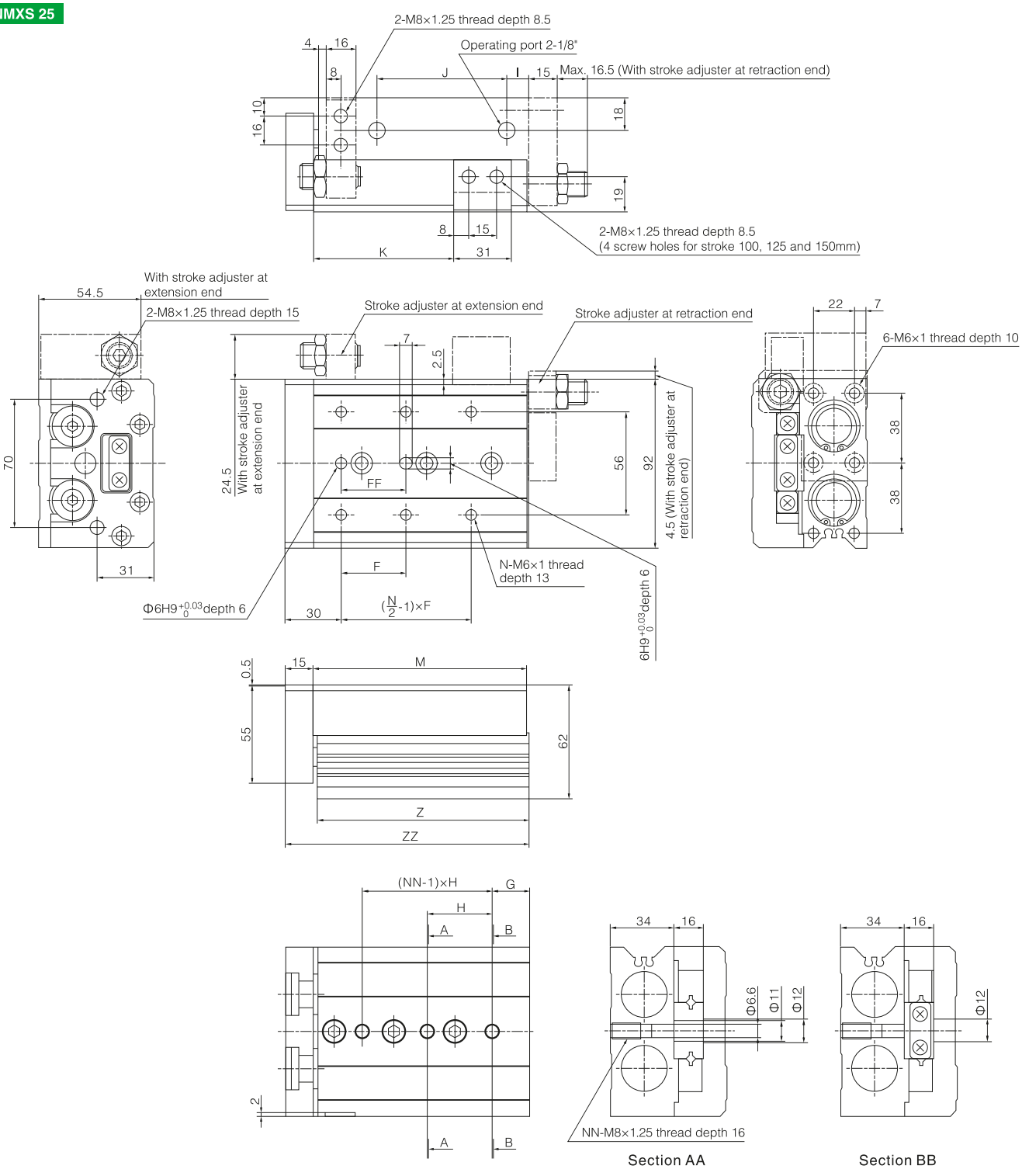


| Model | F | FF | N | G | H | NN | I | J | K | M | Z | ZZ |
|---|---|---|---|---|---|---|---|---|---|---|---|---|
| NMXS25-10 | 50 | 40 | 4 | 22 | 45 | 2 | 12 | 47 | 35 | 92 | 90.5 | 108 |
| NMXS25-20 | 50 | 40 | 4 | 22 | 45 | 2 | 12 | 47 | 45 | 92 | 90.5 | 108 |
| NMXS25-30 | 50 | 40 | 4 | 22 | 45 | 2 | 12 | 47 | 55 | 92 | 90.5 | 108 |
| NMXS25-40 | 60 | 50 | 4 | 22 | 55 | 2 | 12 | 57 | 65 | 102 | 100.5 | 118 |
| NMXS25-50 | 35 | 35 | 6 | 20 | 35 | 3 | 12 | 70 | 75 | 115 | 113.5 | 131 |
| NMXS25-75 | 60 | 60 | 6 | 26 | 35 | 4 | 33 | 90 | 100 | 156 | 154.5 | 172 |
| NMXS25-100 | 70 | 70 | 6 | 32 | 35 | 5 | 50 | 114 | 125 | 197 | 195.5 | 213 |
| NMXS25-125 | 75 | 75 | 8 | 40 | 38 | 6 | 67 | 155 | 150 | 255 | 253.5 | 271 |
| NMXS25-150 | 80 | 80 | 8 | 30 | 40 | 7 | 82 | 180 | 175 | 295 | 293.5 | 311 |

## Function options

### F-with spring buffer

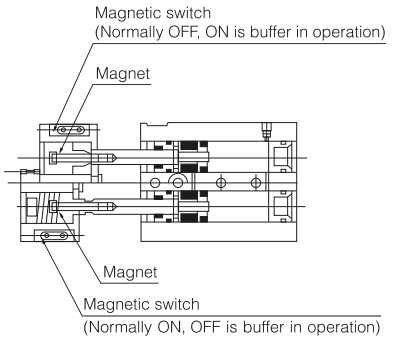


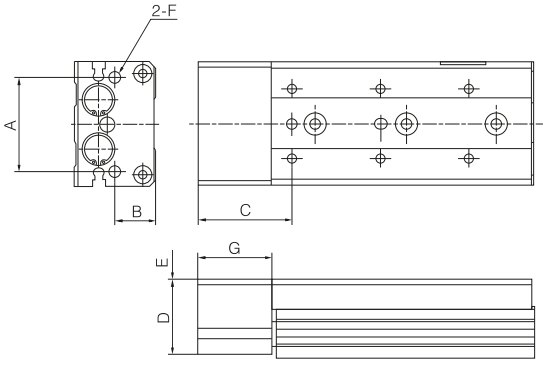


### R-With end lock

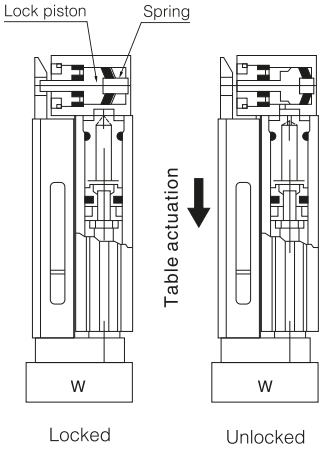


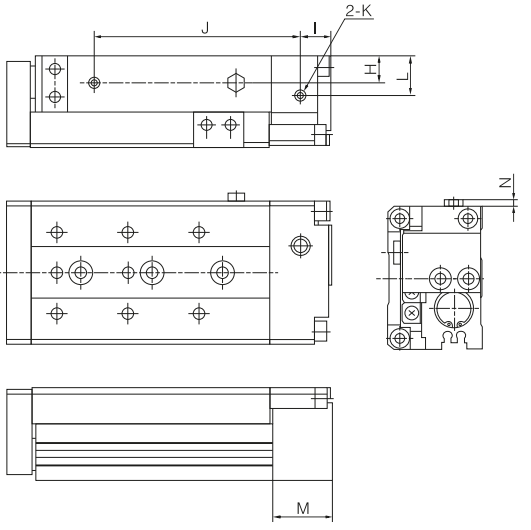


### P-Axial piping type

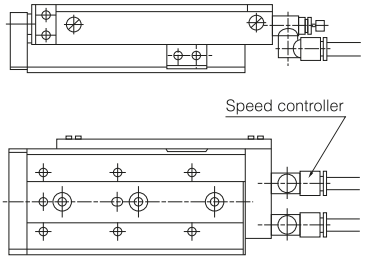


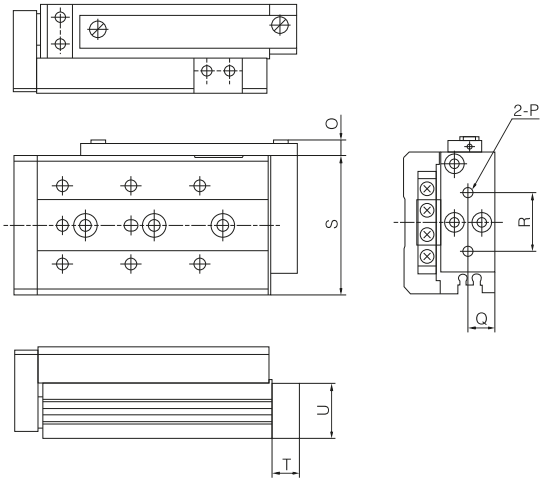


| Model | A | B | C | D | E | F | G | H | I | J | | | | | | | | | K | L | M | N | O | P | Q | R | S | T | U |
|---|---|---|---|---|---|---|---|---|---|---|---|---|---|---|---|---|---|---|---|---|---|---|---|---|---|---|---|---|---|
| | | | | | | | | | | 10 | 20 | 30 | 40 | 50 | 75 | 100 | 125 | 150 | | | | | | | | | | | |
| NMXS6 | 24 | 10 | 28 | 19 | 0.5 | M3×0.5 | 22 | - | - | - | - | - | - | - | - | - | - | - | - | - | - | - | 5.6 | M3×0.5 | 5.5 | 12 | 32 | 8 | 11.5 |
| NMXS8 | 30 | 12 | 28.5 | 22.5 | 0.5 | M3×0.7 | 22.5 | 6.5 | 9 | 39 | 44 | 55 | 73 | 91 | 141 | - | - | - | M3×0.5 | 10 | 15.5 | 3 | 6.5 | M5×0.8 | 6.5 | 15 | 40 | 12 | 13.5 |
| NMXS12 | 38 | 16 | 37 | 30 | 0.5 | M5×0.8 | 29 | 9.5 | 10.5 | 59.5 | 59.5 | 59.5 | 71.5 | 91.5 | 137.5 | 191.5 | - | - | M5×0.8 | 14.5 | 20 | 3 | 6.5 | M5×0.8 | 9.5 | 20 | 50 | 12 | 18.7 |
| NMXS16 | 48 | 20 | 41 | 37.5 | 0.5 | M6×1 | 30 | 12 | 13 | 62 | 62 | 62 | 72 | 87 | 137 | 185 | 235 | - | M5×0.8 | 18 | 25 | 3 | 6.5 | M5×0.8 | 12 | 26 | 62 | 12 | 23.5 |
| NMXS20 | 58 | 25 | 44.5 | 45.5 | 0.5 | M6×1 | 30.5 | 15 | 15.5 | 68.5 | 68.5 | 68.5 | 78.5 | 93.5 | 132.5 | 185.5 | 239.5 | 291.5 | 1/8" | 20 | 30 | - | 11.5 | 1/8" | 15 | 32 | 76 | 20 | 29.5 |
| NMXS25 | 70 | 31 | 50 | 55 | 0.5 | M8×1.25 | 35 | 18 | 18 | 76 | 76 | 76 | 86 | 99 | 140 | 181 | 239 | 279 | 1/8" | 25.5 | 35 | - | 11.5 | 1/8" | 18 | 40 | 92 | 20 | 35.5 |

1. Small size, firm, high precision.
2. Combination of small cylinder and circular linear guide.
3. Parallelism: 30μm, perpendicularity: 50μm.
4. Double cylinder design, 2 times output force.
5. Large load moment.
6. Adjustable travel (with adjustable travel device).
7. Magnetic switch can be installed.

## Specifications

| Model | NMXQ6 | NMXQ8 | NMXQ12 | NMXQ16 | NMXQ20 | NMXQ25 |
|---|---|---|---|---|---|---|
| Bore size (mm) | Φ6×2 (Equate to Φ8) | Φ8×2 (Equate to Φ11) | Φ12×2 (Equate to Φ17) | Φ16×2 (Equate to Φ22) | Φ20×2 (Equate to Φ28) | Φ25×2 (Equate to Φ35) |
| Use fluid | Air (to be filtered by 40μm filter element) | | | | | |
| Action mode | Double action | | | | | |
| Maximum operating pressure | 0.7MPa | | | | | |
| Minimum operating pressure | 0.15MPa | | | | | |
| Ambient and fluid temperature | -10 to 60℃ (No freezing) | | | | | |
| Piston speed (mm/s) | 50~500 (Adjuster option/Metal stopper: 50 to 200) | | | | | |
| Cushion | Rubber buffer (standard), hydraulic buffer, none(Shock absorber) | | | | | |
| Stroke length tolerance(mm) | $^{+1}_{0}$ | | | | | |
| Lubrication | Non-lube | | | | | |
| Pipe size | M5×0.8 | | | | | 1/8" |

Note: If lubrication is required, please use turbine No.1 oil ISO VG32.

## Selection table

| Model: Standard type | Model: Symmetric type | Bore size (mm) | Standard stroke (mm): 10 | 20 | 30 | 40 | 50 | 75 | 100 | 125 | 150 | Adjuster option: Rubber stopper: Extension end | Rubber stopper: Retraction end | Rubber stopper: Both ends | Shock absorber: Extension end | Shock absorber: Retraction end | Shock absorber: Both ends | Metal stopper: Extension end | Metal stopper: Retraction end | Metal stopper: Both ends | Functional option: With buffer | With end lock | Axial piping type | Magnetic switch |
|---|---|---|---|---|---|---|---|---|---|---|---|---|---|---|---|---|---|---|---|---|---|---|---|---|
| NMXQ6 | NMXQ6L | 6 | ● | ● | ● | ● | ● | | | | | ● | ● | ● | ● | ● | ● | ● | ● | ● | ● | ● | ● | A93(V) A96(V) M9N(V) M9B(V) M9P(V) F9NW |
| NMXQ8 | NMXQ8L | 8 | ● | ● | ● | ● | ● | ● | | | | ● | ● | ● | ● | ● | ● | ● | ● | ● | ● | ● | ● | |
| NMXQ12 | NMXQ12L | 12 | ● | ● | ● | ● | ● | ● | ● | | | ● | ● | ● | ● | ● | ● | ● | ● | ● | ● | ● | ● | |
| NMXQ16 | NMXQ16L | 16 | ● | ● | ● | ● | ● | ● | ● | ● | | ● | ● | ● | ● | ● | ● | ● | ● | ● | ● | ● | ● | |
| NMXQ20 | NMXQ20L | 20 | ● | ● | ● | ● | ● | ● | ● | ● | ● | ● | ● | ● | ● | ● | ● | ● | ● | ● | ● | ● | ● | |
| NMXQ25 | NMXQ25L | 25 | ● | ● | ● | ● | ● | ● | ● | ● | ● | ● | ● | ● | ● | ● | ● | ● | ● | ● | ● | ● | ● | |

## Combination and collocation

| Stroke adjuster \ Function options | Without | F | R | P | FR | FP |
|---|---|---|---|---|---|---|
| Without | ○ | ○ | ○ | ○ | ○ | ○ |
| AS, CS | ○ | ○ | ○ | ○ | ○ | ○ |
| AT, CT | ○ | ○ | × | × | × | × |
| A, C | ○ | ○ | × | × | × | × |
| BS | ○ | × | ○ | ○ | × | × |
| BT | ○ | ○ | × | × | × | × |
| B | ○ | × | × | × | × | × |

○: available, ×: not available.

## Ordering code

**NMXQ 12 L – 50 AS FR – M9N □**

**Bore size**

**Symmetric type**

| | |
|---|---|
| Blank | Standard type |
| L | Symmetric type |

**Stroke**

**Adjuster option**

| | | |
|---|---|---|
| Blank | Without adjuster | Without |
| AS | Extension end rubber stopper | Extension end |
| AT | Retraction end rubber stopper | Retraction end |
| A | Double end rubber stopper | Both ends |
| *BS | Extension end absorber | Extension end |
| *BT | Retraction end absorber | Retraction end |
| *B | Double absorber | Both ends |
| CS | Extension end metal stopper | Extension end |
| CT | Retraction end metal stopper | Retraction end |
| C | Double metal stopper | Both ends |

* With shock absorber is not available in NMXQ6 series.

**Functional option**

| | |
|---|---|
| Blank | Standard type |
| F | With buffer |
| *R | With end lock |
| P | Axial piping type |
| *FR | With buffer and end lock |
| FP | With buffer, Axial piping type |

* With end lock is not available in NMXQ6 series.

**Magnetic switch**

| | |
|---|---|
| Blank | without magnetic switch |

* Wire length representation mark: no mark -0.5m, L-3m, Z-5m.

**Number of magnetic switches**

| | |
|---|---|
| Blank | 2 pcs. |
| S | 1 pc. |
| n | n pcs. |

## Cylinder and table combination

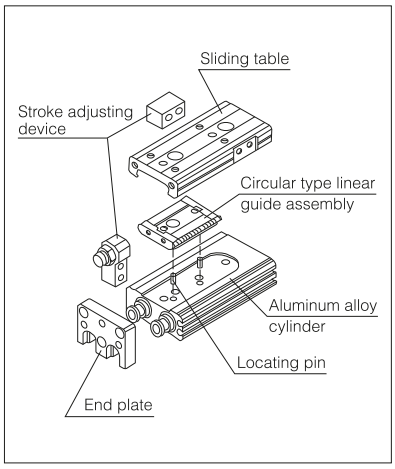


## Application examples

Picking action

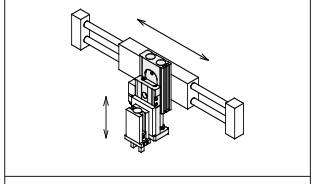

Precision positioning

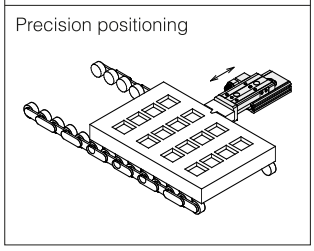

## Theoretical output force table

Design of double cylinder cylinder

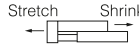


(Unit: N)

| Bore size (mm) | Action direction | Compression area (mm²) | Use pressure (Mpa): 0.2 | 0.3 | 0.4 | 0.5 | 0.6 | 0.7 |
|---|---|---|---|---|---|---|---|---|
| Φ6×2 | Stretch | 57 | 11 | 17 | 23 | 29 | 34 | 40 |
| | Shrink | 42 | 8 | 13 | 17 | 21 | 25 | 29 |
| Φ8×2 | Stretch | 101 | 20 | 30 | 40 | 51 | 61 | 71 |
| | Shrink | 75 | 15 | 23 | 30 | 38 | 45 | 53 |
| Φ12×2 | Stretch | 226 | 45 | 68 | 90 | 113 | 136 | 158 |
| | Shrink | 170 | 34 | 51 | 68 | 85 | 102 | 119 |
| Φ16×2 | Stretch | 402 | 80 | 121 | 161 | 201 | 241 | 281 |
| | Shrink | 302 | 60 | 91 | 121 | 151 | 181 | 211 |
| Φ20×2 | Stretch | 628 | 126 | 188 | 251 | 314 | 377 | 440 |
| | Shrink | 471 | 94 | 141 | 188 | 236 | 283 | 330 |
| Φ25×2 | Stretch | 982 | 196 | 295 | 393 | 491 | 289 | 687 |
| | Shrink | 756 | 151 | 227 | 302 | 378 | 454 | 529 |

Note: theoretical output force(N)=pressure(MPa)×compression area (mm²).

## Selection method of pneumatic slide table

| Model Selection Steps | Formula/Data | Selection Examples |
|---|---|---|

### 1 Operating Conditions

Enumerate the operating conditions considering the mounting position and workpiece configuration. Check that the load weight does not exceed the maximum allowable load weight and that the average operating speed does not exceed the operating speed range.

- Model to be used
- Type of cushion
- Workpiece mounting position
- Mounting orientation
- Average operating speed Va (mm/s)
- Load mass W (kg): Fig. (1), Table (2)
- Overhang Ln (mm) Fig. (2)

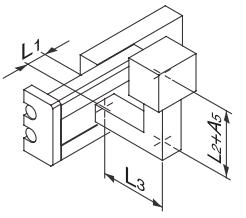


Cylinder: NMXQ16-50
Cushion: Rubber stopper
Workpiece table mounting
Mounting: Horizontal wall mounting
Average operating speed:
Va = 300 [mm/s]
Load mass: W = 1 [kg]
L1 = 10 mm
L2 = 30 mm
L3 = 30 mm

### 2 Kinetic Energy

Find the kinetic energy E (J) of the load.

Find the allowable kinetic energy Ea (J).

Confirm that the kinetic energy of the load does not exceed the allowable kinetic energy.

$E=\frac{1}{2}\cdot W(\frac{V}{1000})^2$

Collision speed $V=\underline{1.4}_{※}\cdot Va$

※) Correction factor (Reference values)

Ea = K・Emax

Workpiece mounting coefficient K: Fig.(3)

Max. allowable kinetic energy Emax: Table (1)

Kinetic energy (E) ≤ Allowable kinetic energy (Ea)

$E=\frac{1}{2}\times1(\frac{420}{1000})^2=0.088$

V=1.4×300=420

Ea=1×0.11=0.11

Can be used based on E=0.088 ≤ Ea=0.11

### 3 Load Factor

#### 3-1 Load Factor of Load Mass

Find the allowable load mass Wa (kg).
Note) No need to consider this load factor in the case of using perpendicularly in a vertical position. (Define α1=0.)
Find the load factor of the load weight α1.

Wa = K・β・Wmax
Workpiece mounting coefficient K: Fig. (3)
Allowable load mass coefficient β: Graph (1)
Max. allowable load mass Wmax: Table (2)
α1 = W/Wa

Wa=1×1×4=4
K=1
β=1
Wmax=4
α1=1/4=0.25

#### 3-2 Load Factor of Static Moment

Find the static moment M (N・m).

M=W×9.8(Ln+An)/1000
Correction value of moment center position distance An: Table (3)

Find the allowable static moment Ma (N・m).

Ma=K・γ・Mmax
Workpiece mounting coefficient K: Fig. (3)
Allowable moment coefficient γ: Graph (2)
Maximum allowable moment Mmax: Table (4)

Find the load factor α2 of the static moment.

α2=M/Ma

**Yawing**

Examine My.
My=1×9.8(10+30)/1000=0.39
$A_3$=30
May=1×1×18=18
Mymax=18
K=1
γ=1
α2=0.39/18=0.022

**Rolling**

Examine Mr.
Mr=1×9.8(30+10.5)/1000=0.39
$A_6$=10.5
Mar=36
Mymax=36
K=1
γ=1
α'2=0.39/36=0.011

#### 3-3 Load Factor of Dynamic Moment

Find the dynamic moment Me (N・m).

$Me=1/3\cdot We\times9.8\frac{(Ln+An)}{1000}$
Collision equivalent to impact We = δ·W·V
δ: Bumper coefficient
Rubber stopper without adjuster = 4/100
Shock absorber = 1/100
Metal stopper = 16/100
Correction value of moment center position distance An: Table (3)

Find the allowable dynamic moment Mea (N・m).

Mea = K・γ・Mmax
Workpiece mounting coefficient K: Fig. (3)
Allowable moment coefficient γ: Graph (2)
Max. allowable moment Mmax: Table (4)

Find the load factor α3 of the dynamic moment.

α3=Me/Mea

**Pitching** Examine Mep.

$Mep=1/3\times16.8\times9.8\times\frac{(30+10.5)}{1000}=2.2$
We=4/100×1×420=16.8
$A_2$=10.5
Meap=1×0.7×18=12.6
K=1
γ=0.7
Mpmax=18
α3=2.2/12.6=0.17

**Yawing** Examine Mey.

$Mey=1/3\times16.8\times9.8\times\frac{(30+24.5)}{1000}=3.0$
We=16.8
$A_4$=24.5
Meay=12.6(Same value as Meap)
α'3=3.0/12.6=0.24

#### 3-4 Sum of Load Factors

Use is possible if the sum of the load factors does not exceed 1.

∑αn=α1+α2+……+αn≤1

∑αn=α1+α2+α'2+α3+α'3
=0.25+0.022+0.011+0.17+0.24=0.693≤1
And it is possible to use.

Fig. (1)
Load Mass: W (kg)

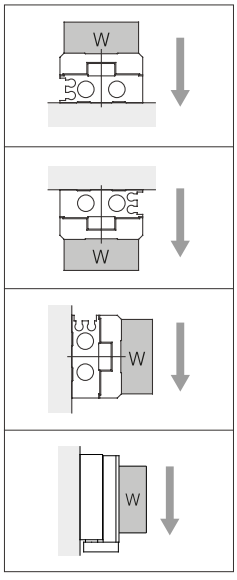


Fig. (2) Overhang: Ln (mm), Correction Value of Moment Center Position Distance: An (mm)

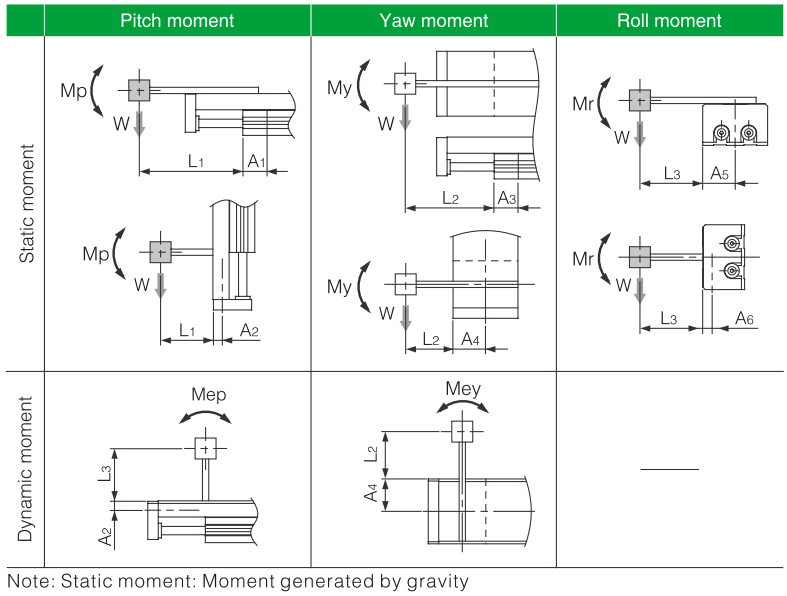


Note: Static moment: Moment generated by gravity
Dynamic moment: Moment generated by impact when colliding with stopper

Fig. (3) Workpiece Mounting Coefficient: K

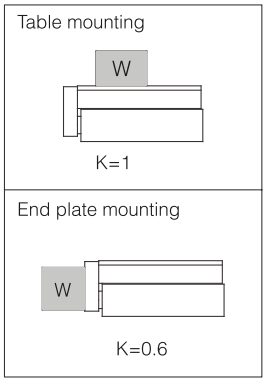


Table (1) Maximum Allowable Kinetic Energy: Emax (J)

| Model | Allowable kinetic energy | | | |
|---|---|---|---|---|
| | Without adjuster | Adjuster option | | |
| | | Rubber stopper | Shock absorber | Metal stopper |
| NMXQ6 | 0.018 | 0.018 | - | 0.009 |
| NMXQ8 | 0.027 | 0.027 | 0.054 | 0.013 |
| NMXQ12 | 0.055 | 0.055 | 0.11 | 0.027 |
| NMXQ16 | 0.11 | 0.11 | 0.22 | 0.055 |
| NMXQ20 | 0.16 | 0.16 | 0.32 | 0.080 |
| NMXQ25 | 0.24 | 0.24 | 0.48 | 0.12 |

⚠Caution The maximum operating speed for metal stopper is 200 mm/s.

Table (2) Maximum Allowable Load Mass: Wmax (kg)

| Model | Maximum allowable load mass |
|---|---|
| NMXQ6 | 0.6 |
| NMXQ8 | 1 |
| NMXQ12 | 2 |
| NMXQ16 | 4 |
| NMXQ20 | 6 |
| NMXQ25 | 9 |

Graph (1) Allowable Load Mass Coefficient: β

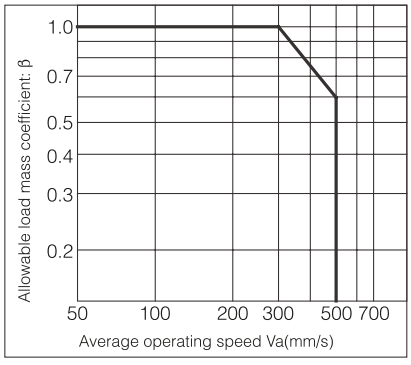


Table (3) Correction Value of Moment Center Position Distance: An (mm)

| Model | Correction value of moment center position distance (Refer to Figure (2).) | | | | | | | | | | | | |
|---|---|---|---|---|---|---|---|---|---|---|---|---|---|
| | A1, A3 | | | | | | | | | A2 | A4 | A5 | A6 |
| | Stroke (mm) | | | | | | | | | | | | |
| | 10 | 20 | 30 | 40 | 50 | 75 | 100 | 125 | 150 | | | | |
| NMXQ6 | 14.5 | 14.5 | 14.5 | 18.5 | 18.5 | - | - | - | - | 6 | 13.5 | 13.5 | 6 |
| NMXQ8 | 16.5 | 16.5 | 18.5 | 20.5 | 28 | 28.5 | - | - | - | 7 | 16 | 16 | 7 |
| NMXQ12 | 21 | 21 | 21 | 25 | 25 | 34 | 34 | - | - | 9 | 19.5 | 19.5 | 9 |
| NMXQ16 | 27 | 27 | 27 | 27 | 30 | 33 | 42.5 | 42.5 | - | 10.5 | 24.5 | 24.5 | 10.5 |
| NMXQ20 | 29.5 | 29.5 | 29.5 | 29.5 | 33.5 | 37.5 | 53.5 | 55 | 56.5 | 14 | 30 | 30 | 14 |
| NMXQ25 | 35.5 | 35.5 | 35.5 | 35.5 | 43 | 43 | 50 | 64 | 64 | 16.5 | 37 | 37 | 16.5 |

Note: For A2, A4, A5 and A6, there is no difference in the corrected values due to the stroke.

Graph (2) Allowable Moment Coefficient: γ

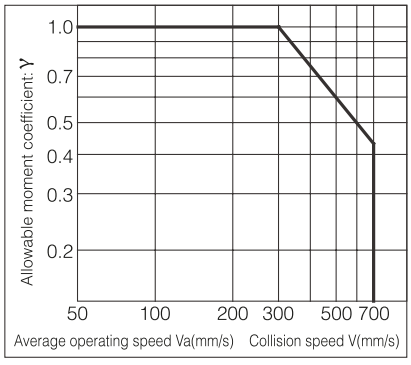


Note: Use the average operating speed when calculating static moment.
Use the collision speed when calculating dynamic moment.

Table (4) Maximum Allowable Moment: Mmax (N·m)

| Model | Pitch/Yaw moment: Mpmax/Mymax | | | | | | | | | Roll moment: Mrmax | | | | | | | | |
|---|---|---|---|---|---|---|---|---|---|---|---|---|---|---|---|---|---|---|
| | Stroke (mm) | | | | | | | | | Stroke (mm) | | | | | | | | |
| | 10 | 20 | 30 | 40 | 50 | 75 | 100 | 125 | 150 | 10 | 20 | 30 | 40 | 50 | 75 | 100 | 125 | 150 |
| NMXQ6 | 1.4 | 1.4 | 1.4 | 2.8 | 2.8 | - | - | - | - | 3.5 | 3.5 | 3.5 | 5.1 | 5.1 | - | - | - | - |
| NMXQ8 | 2.0 | 2.0 | 2.8 | 3.7 | 7.9 | 7-.9 | - | - | - | 5.1 | 5.1 | 6.0 | 6.9 | 7.4 | 7.4 | - | - | - |
| NMXQ12 | 4.7 | 4.7 | 4.7 | 7.2 | 7.2 | 15 | 15 | - | - | 11 | 11 | 11 | 13 | 13 | 14 | 14 | - | - |
| NMXQ16 | 13 | 13 | 13 | 13 | 18 | 23 | 42 | 42 | - | 31 | 31 | 31 | 31 | 36 | 41 | 41 | 41 | - |
| NMXQ20 | 19 | 19 | 19 | 19 | 27 | 36 | 84 | 84 | 84 | 47 | 47 | 47 | 47 | 57 | 66 | 75 | 75 | 75 |
| NMXQ25 | 32 | 32 | 32 | 32 | 52 | 52 | 78 | 140 | 140 | 81 | 81 | 81 | 81 | 110 | 110 | 130 | 130 | 130 |

Symbol

| Symbol | Definition | Unit |
|---|---|---|
| An (n=1 to 6) | Correction value of moment center position distance | mm |
| E | Kinetic energy | J |
| Emax | Allowable kinetic energy | J |
| Ln (n=1 to 3) | Overhang | mm |
| M (Mp, My, Mr) | Static moment (Pitch, Yaw, Roll) | N·m |
| Ma (Map, May, Mar) | Allowable static moment (Pitch, Yaw, Roll) | N·m |
| Me (Mep, Mey) | Dynamic moment (Pitch, Yaw) | N·m |
| Mea (Meap, Meay) | Allowable dynamic moment (Pitch, Yaw) | N·m |
| Mmax (Mpmax, Mymax, Mrmax) | Max. allowable moment (Pitch, Yaw, Roll) | N·m |
| V | Collision speed | mm/s |

| Symbol | Definition | Unit |
|---|---|---|
| Va | Average operating speed | mm/s |
| W | Load mass | kg |
| Wa | Allowable load mass | kg |
| We | Weight equivalent to impact | kg |
| Wmax | Max. allowable load mass | kg |
| α | Load factor | - |
| β | Allowable load mass coefficient | - |
| γ | Allowable moment coefficient | - |
| K | Workpiece mounting coefficient | - |

## Dimensions

### Basic type(NMXQ 6)

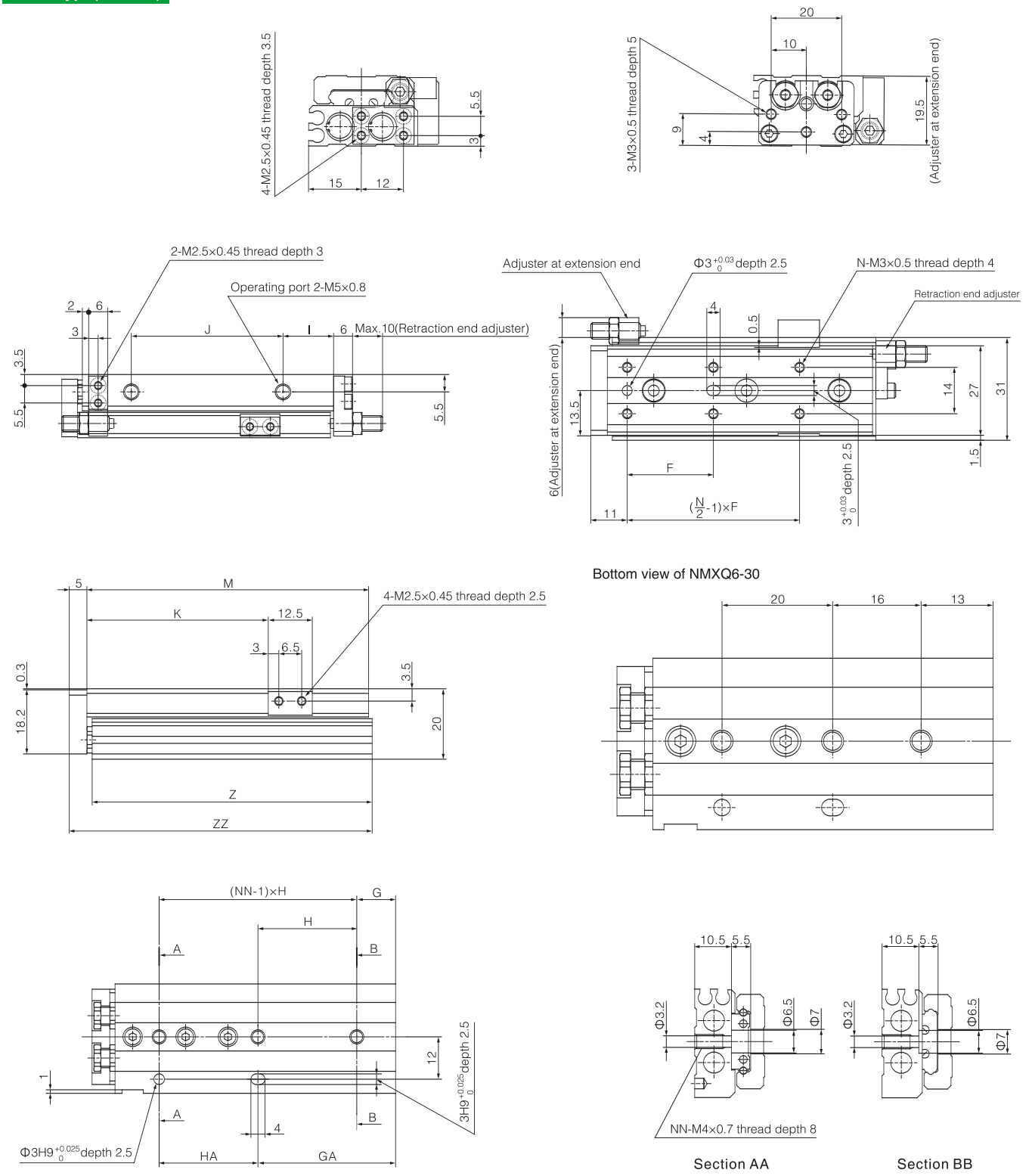


| Model | F | N | G | H | NN | GA | HA | I | J | K | M | Z | ZZ |
|---|---|---|---|---|---|---|---|---|---|---|---|---|---|
| NMXQ6-10 | 22 | 4 | 6 | 23 | 2 | 13 | 16 | 9 | 17 | 21.5 | 42 | 41.5 | 48 |
| NMXQ6-20 | 25 | 4 | 13 | 26 | 2 | 13 | 26 | 9 | 27 | 31.5 | 52 | 51.5 | 58 |
| NMXQ6-30 | 21 | 6 | - | - | 3 | 29 | 20 | 9 | 37 | 41.5 | 62 | 61.5 | 68 |
| NMXQ6-40 | 26 | 6 | 11 | 28 | 3 | 39 | 28 | 16 | 48 | 51.5 | 80 | 79.5 | 86 |
| NMXQ6-50 | 27 | 6 | 21 | 28 | 3 | 49 | 28 | 9 | 65 | 61.5 | 90 | 89.5 | 96 |

## Basic type(NMXQ 8)

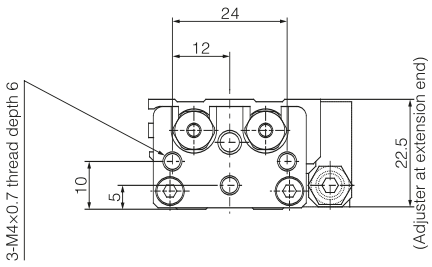


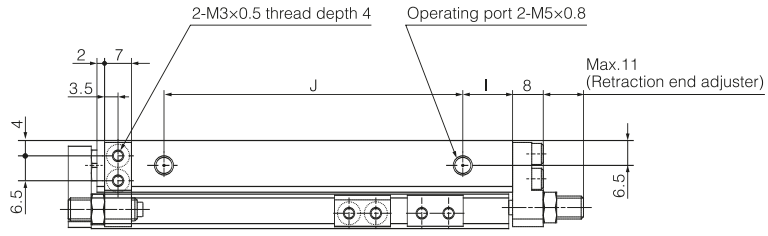


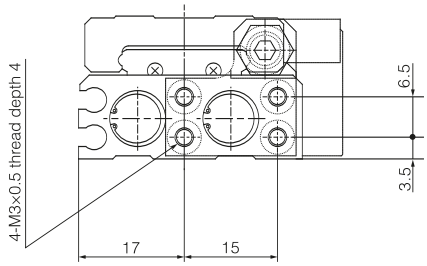


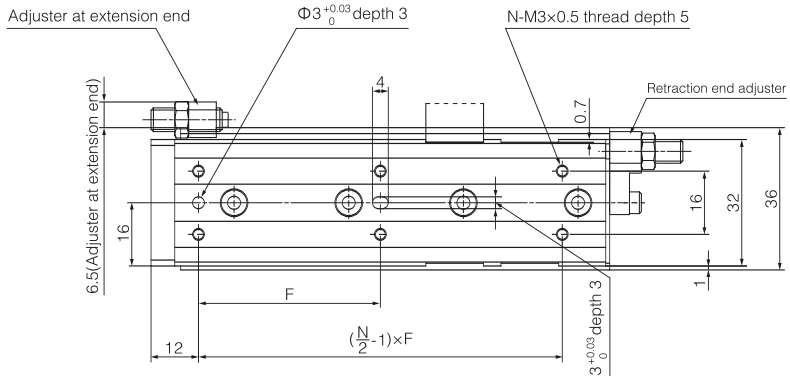


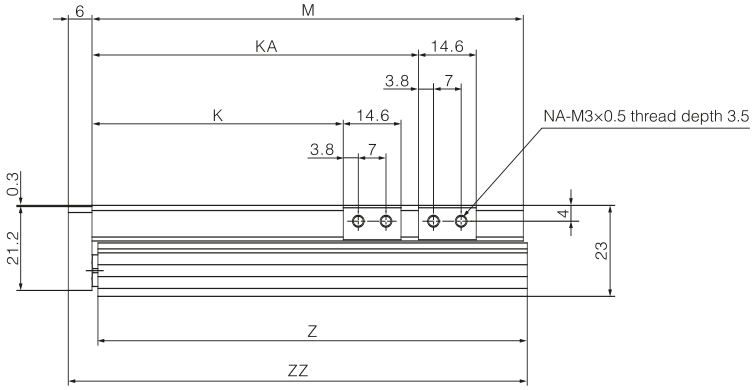


Bottom view of NMXQ8-30

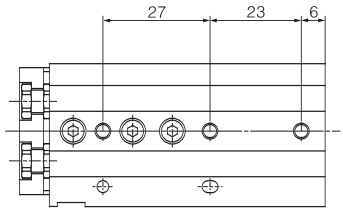


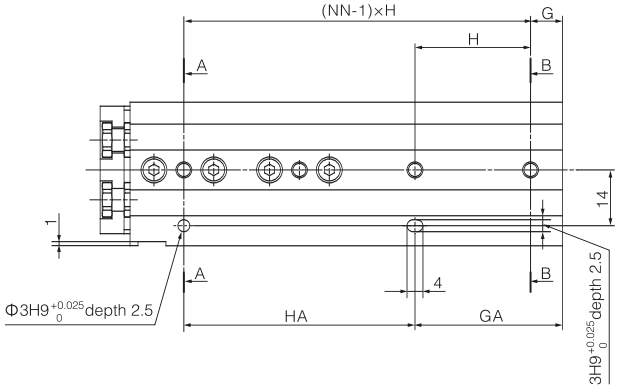


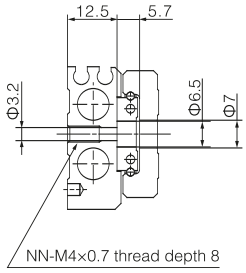


Section AA

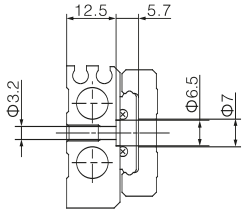


Section BB

| Model | F | N | G | H | NN | GA | HA | I | J | K | KA | NA | M | Z | ZZ |
|---|---|---|---|---|---|---|---|---|---|---|---|---|---|---|---|
| NMXQ8-10 | 25 | 4 | 7 | 25 | 2 | 13 | 19 | 11 | 17 | 23.5 | - | 4 | 46 | 45.5 | 53 |
| NMXQ8-20 | 25 | 4 | 14 | 28 | 2 | 14 | 28 | 10 | 28 | 33.5 | - | 4 | 56 | 55.5 | 63 |
| NMXQ8-30 | 26 | 6 | - | - | 3 | 29 | 27 | 12 | 40 | 43.5 | - | 4 | 70 | 69.5 | 77 |
| NMXQ8-40 | 32 | 6 | 8 | 31 | 3 | 39 | 31 | 14 | 52 | 53.5 | - | 4 | 84 | 83.5 | 91 |
| NMXQ8-50 | 46 | 6 | 8 | 29 | 4 | 37 | 58 | 13 | 78 | 63.5 | 82.5 | 8 | 109 | 108.5 | 116 |
| NMXQ8-75 | 50 | 6 | 31 | 30 | 4 | 61 | 60 | 12 | 105 | 88.5 | 112.5 | 8 | 135 | 134.5 | 142 |

## Basic type(NMXQ 12)

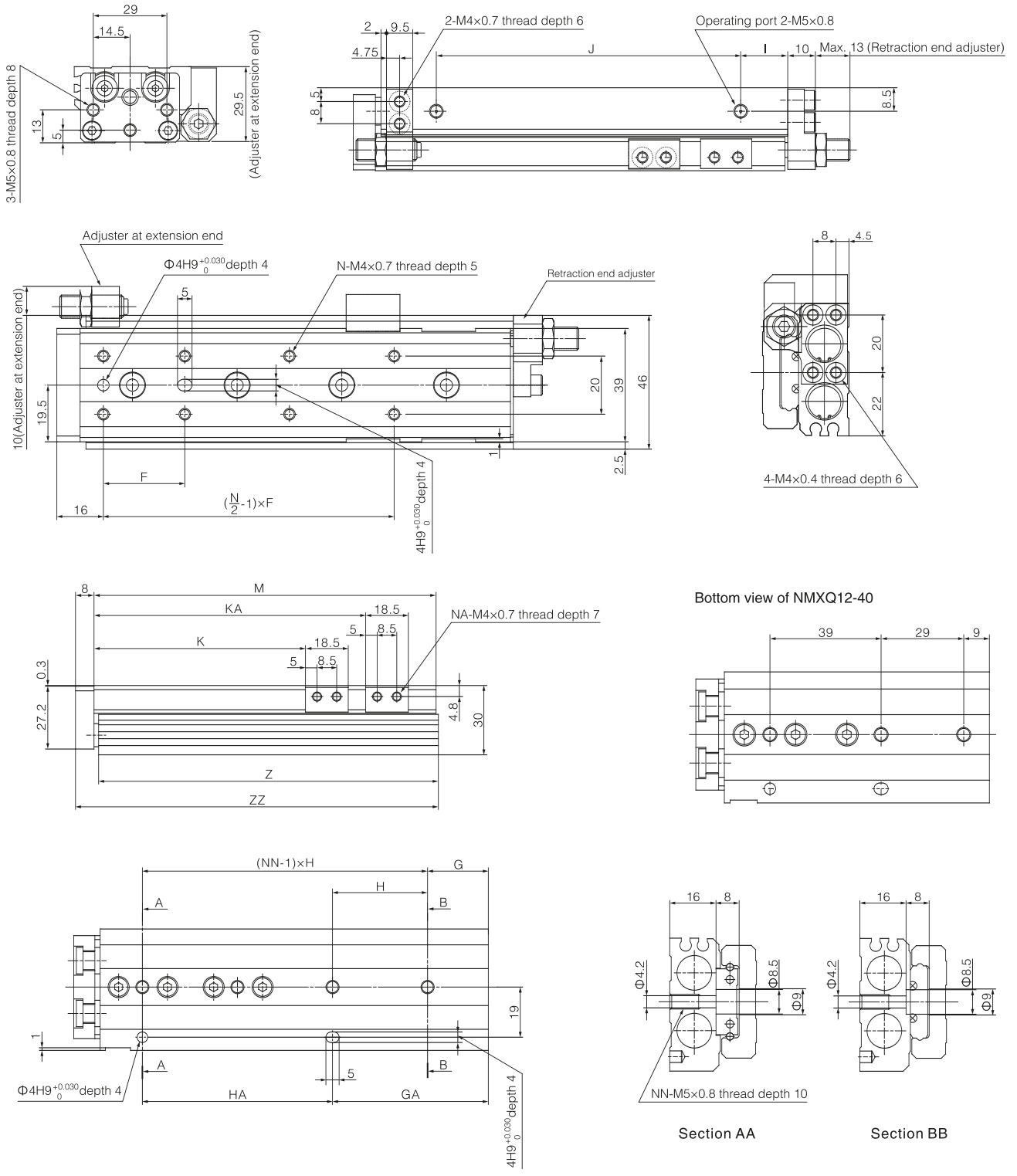


| Model | F | N | G | H | NN | GA | HA | I | J | K | KA | NA | M | Z | ZZ |
|---|---|---|---|---|---|---|---|---|---|---|---|---|---|---|---|
| NMXQ12-10 | 28 | 4 | 18 | 32 | 2 | 18 | 32 | 12 | 34 | 26.5 | - | 4 | 67 | 66 | 76 |
| NMXQ12-20 | 28 | 4 | 18 | 32 | 2 | 18 | 32 | 12 | 34 | 36.5 | - | 4 | 67 | 66 | 76 |
| NMXQ12-30 | 38 | 4 | 20 | 40 | 2 | 20 | 40 | 14 | 42 | 46.5 | - | 4 | 77 | 76 | 86 |
| NMXQ12-40 | 34 | 6 | - | - | 3 | 38 | 39 | 15 | 58 | 56.5 | - | 4 | 94 | 93 | 103 |
| NMXQ12-50 | 34 | 6 | 9 | 39 | 3 | 48 | 39 | 13 | 70 | 66.5 | - | 4 | 104 | 103 | 113 |
| NMXQ12-75 | 36 | 8 | 23 | 36 | 4 | 59 | 72 | 17 | 110 | 91.5 | 117.5 | 8 | 148 | 147 | 157 |
| NMXQ12-100 | 36 | 10 | 12 | 36 | 5 | 84 | 72 | 17 | 135 | 116.5 | 142.5 | 8 | 173 | 172 | 182 |

## Basic type(NMXQ 16)

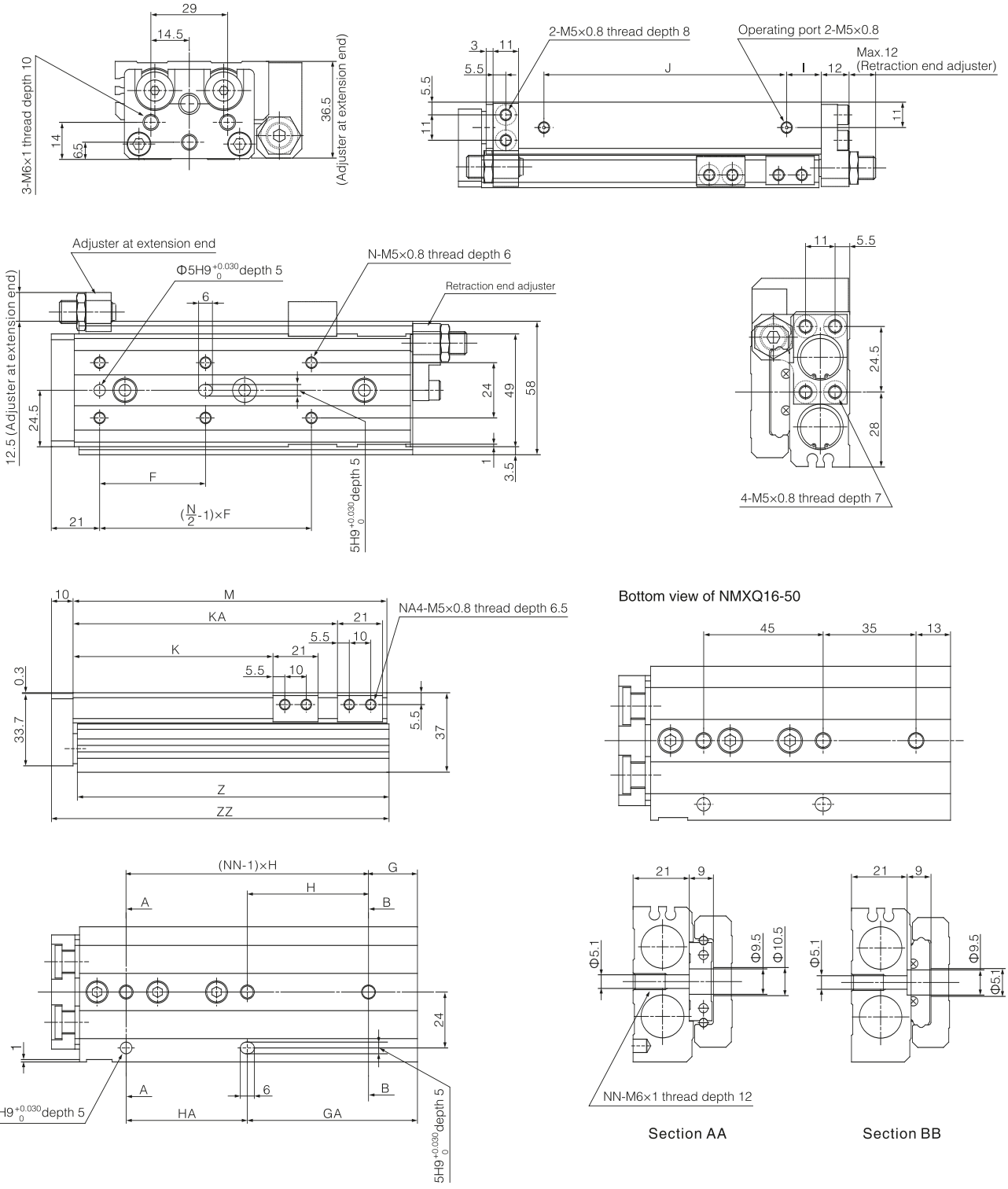


| Model | F | N | G | H | NN | GA | HA | I | J | K | KA | NA | M | Z | ZZ |
|---|---|---|---|---|---|---|---|---|---|---|---|---|---|---|---|
| NMXQ16-10 | 38 | 4 | 18 | 39 | 2 | 18 | 39 | 12 | 40 | 28 | - | 4 | 78 | 77 | 89 |
| NMXQ16-20 | 38 | 4 | 18 | 39 | 2 | 18 | 39 | 12 | 40 | 38 | - | 4 | 78 | 77 | 89 |
| NMXQ16-30 | 48 | 4 | 19 | 48 | 2 | 19 | 48 | 12 | 50 | 48 | - | 4 | 88 | 87 | 99 |
| NMXQ16-40 | 58 | 4 | 19 | 58 | 2 | 19 | 58 | 12 | 60 | 58 | - | 4 | 98 | 97 | 109 |
| NMXQ16-50 | 40 | 6 | - | - | 3 | 48 | 45 | 20 | 68 | 68 | 91 | 8 | 114 | 113 | 125 |
| NMXQ16-75 | 46 | 6 | 21 | 52 | 3 | 73 | 52 | 15 | 105 | 93 | 123 | 8 | 146 | 145 | 157 |
| NMXQ16-100 | 44 | 8 | 36 | 44 | 4 | 80 | 88 | 18 | 145 | 118 | 166 | 8 | 189 | 188 | 200 |
| NMXQ16-125 | 44 | 10 | 17 | 44 | 5 | 105 | 88 | 23 | 165 | 143 | 191 | 8 | 214 | 213 | 225 |

## Basic type(NMXQ 20)

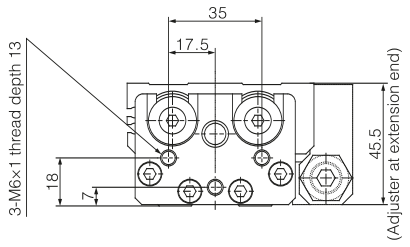


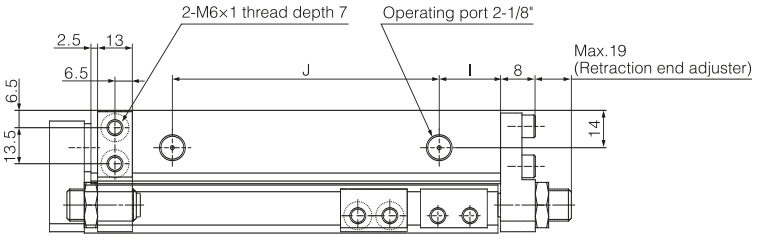


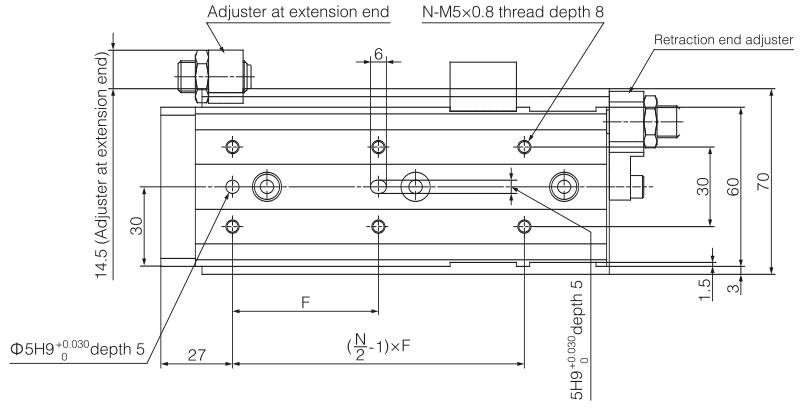


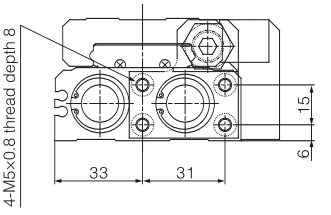


Bottom view of NMXQ20-50

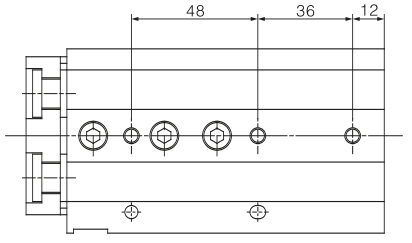


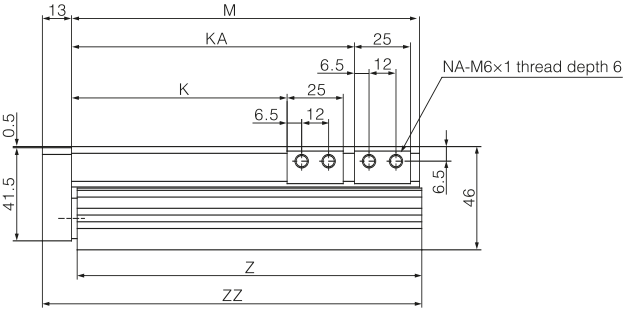


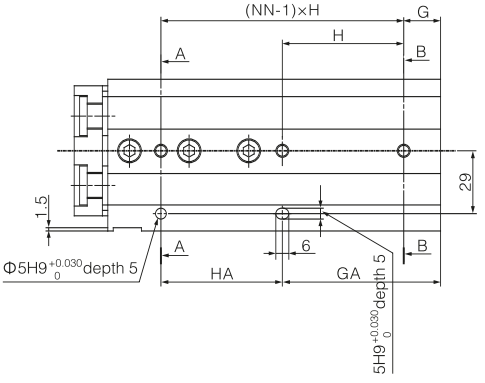


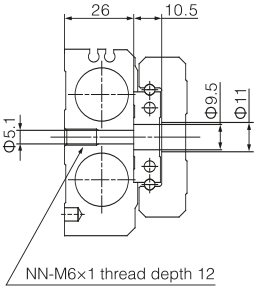


Section AA

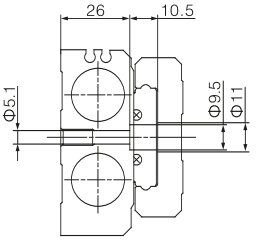


Section BB

| Model | F | N | G | H | NN | GA | HA | I | J | K | KA | NA | M | Z | ZZ |
|---|---|---|---|---|---|---|---|---|---|---|---|---|---|---|---|
| NMXQ20-10 | 45 | 4 | 22 | 46 | 2 | 18 | 50 | 16 | 46 | 31 | - | 4 | 94 | 92.5 | 108 |
| NMXQ20-20 | 40 | 4 | 22 | 46 | 2 | 18 | 50 | 16 | 46 | 41 | - | 4 | 94 | 92.5 | 108 |
| NMXQ20-30 | 48 | 4 | 22 | 46 | 2 | 18 | 50 | 16 | 46 | 51 | - | 4 | 94 | 92.5 | 108 |
| NMXQ20-40 | 58 | 4 | 22 | 56 | 2 | 22 | 56 | 16 | 56 | 61 | - | 4 | 104 | 102.5 | 118 |
| NMXQ20-50 | 42 | 6 | - | - | 3 | 48 | 48 | 18 | 72 | 71 | - | 4 | 122 | 120.5 | 136 |
| NMXQ20-75 | 55 | 6 | 17 | 56 | 3 | 73 | 56 | 23 | 100 | 96 | 126 | 8 | 155 | 153.5 | 169 |
| NMXQ20-100 | 50 | 8 | 18 | 56 | 4 | 74 | 112 | 25 | 155 | 121 | 183 | 8 | 212 | 210.5 | 226 |
| NMXQ20-125 | 55 | 8 | 37 | 59 | 4 | 96 | 118 | 18 | 190 | 146 | 211 | 8 | 240 | 238.5 | 254 |
| NMXQ20-150 | 62 | 8 | 56 | 62 | 4 | 118 | 124 | 21 | 215 | 171 | 239 | 8 | 268 | 266.5 | 282 |

## Basic type(NMXQ 25)

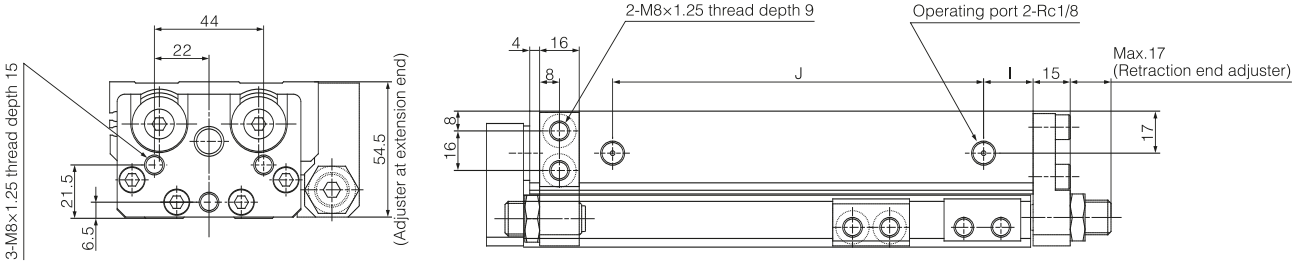


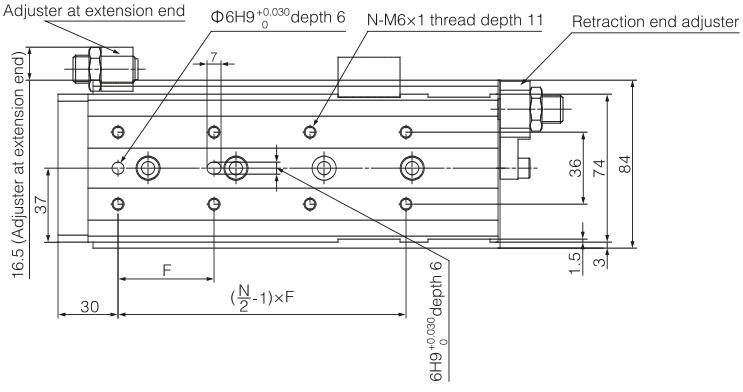


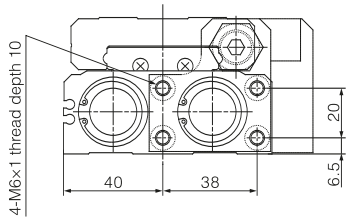


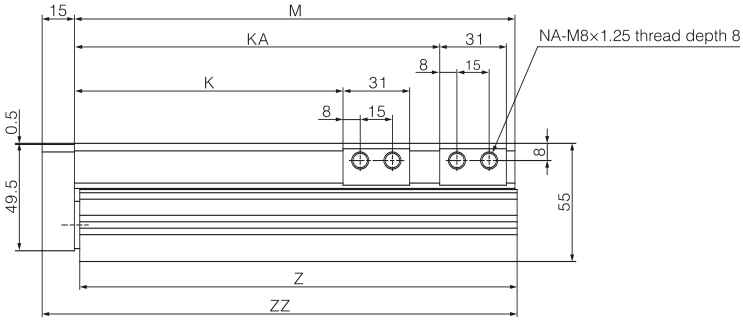


Bottom view of NMXQ25-75

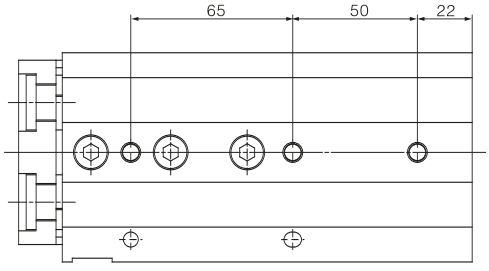


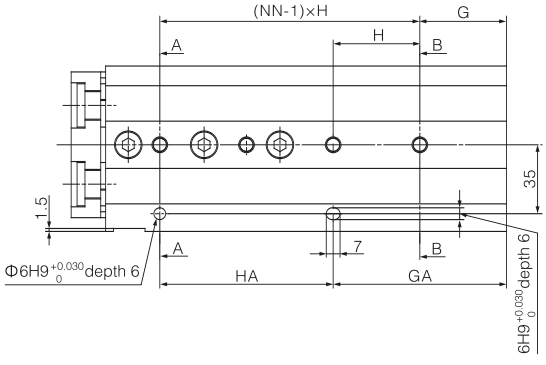


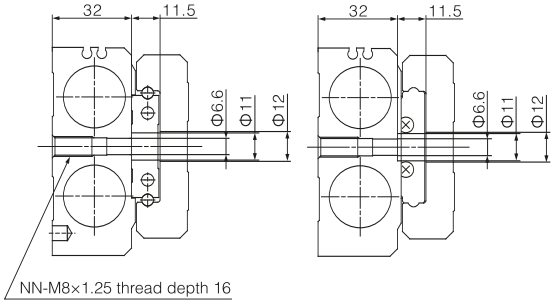


Section AA　　Section BB

| Model | F | N | G | H | NN | GA | HA | I | J | K | KA | NA | M | Z | ZZ |
|---|---|---|---|---|---|---|---|---|---|---|---|---|---|---|---|
| NMXQ25-10 | 55 | 4 | 23 | 55 | 2 | 23 | 55 | 16 | 56 | 35 | - | 4 | 107 | 105.5 | 123 |
| NMXQ25-20 | 46 | 4 | 23 | 55 | 2 | 23 | 55 | 16 | 56 | 45 | - | 4 | 107 | 105.5 | 123 |
| NMXQ25-30 | 55 | 4 | 23 | 55 | 2 | 23 | 55 | 16 | 56 | 55 | - | 4 | 107 | 105.5 | 123 |
| NMXQ25-40 | 65 | 4 | 23 | 65 | 2 | 23 | 65 | 16 | 66 | 65 | - | 4 | 117 | 115.5 | 133 |
| NMXQ25-50 | 75 | 4 | 32 | 80 | 2 | 32 | 80 | 16 | 90 | 75 | - | 4 | 141 | 139.5 | 157 |
| NMXQ25-75 | 60 | 6 | - | - | 3 | 72 | 65 | 31 | 100 | 100 | - | 4 | 166 | 164.5 | 182 |
| NMXQ25-100 | 48 | 8 | 44 | 44 | 4 | 88 | 88 | 20 | 150 | 125 | 170 | 8 | 205 | 203.5 | 221 |
| NMXQ25-125 | 60 | 8 | 31 | 66 | 4 | 97 | 132 | 18 | 205 | 150 | 223 | 8 | 258 | 256.5 | 274 |
| NMXQ25-150 | 65 | 8 | 56 | 66 | 4 | 122 | 132 | 18 | 230 | 175 | 248 | 8 | 283 | 281.5 | 299 |

## Function options

**B-With shock absorber** NMXQ [Bore size] – [Stroke] [ ] BS, BT, B

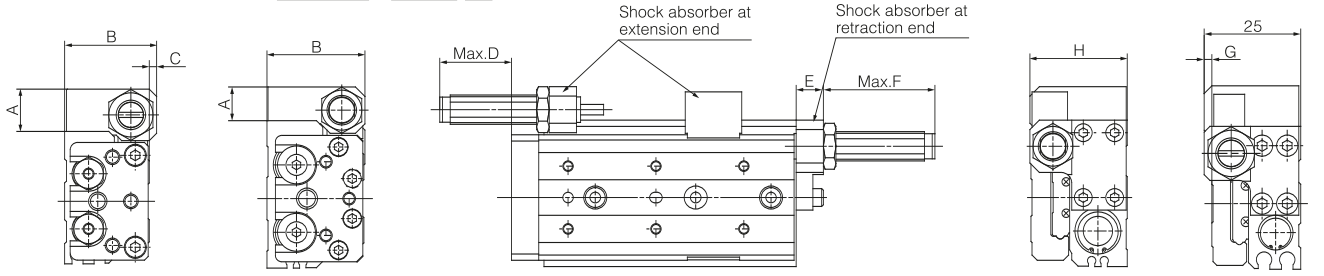


NMXQ 8・20 NMXQ 12・16・25 MXQ 12・16・25 MXQ 8・20

**F-with spring buffer** NMXQ [Bore size] – [Stroke] [ ] F

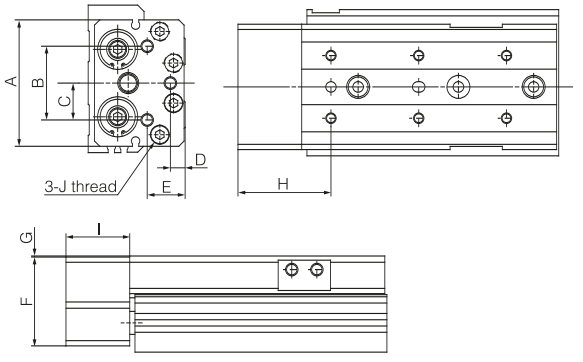


With shock absorber

| Model | Adjust stroke range | | A | B | C | D | E | F | G | H |
|---|---|---|---|---|---|---|---|---|---|---|
| | Front | After | | | | | | | | |
| NMXQ8 | 20 | 20 | 11.5 | 25 | 2 | 23 | 8 | 32 | 2 | 25 |
| NMXQ12 | 18 | 18 | 10 | 29.5 | - | 18 | 10 | 30 | - | 29.5 |
| NMXQ16 | 22 | 22 | 12.5 | 36.5 | - | 20 | 12 | 34 | - | 36.5 |
| NMXQ20 | 35 | 35 | 16 | 46.5 | 0.5 | 35 | 13 | 54 | 0.5 | 46.5 |
| NMXQ25 | 35 | 35 | 16.5 | 54.5 | - | 29 | 15 | 52 | - | 54.5 |

With spring buffer

| Model | A | B | C | D | E | F | G | H | I | J |
|---|---|---|---|---|---|---|---|---|---|---|
| NMXQ6 | 30 | 16 | 8 | 4 | 8 | 19.2 | 0.3 | 28 | 22 | M3×0.5 depth 5 |
| NMXQ8 | 34 | 24 | 12 | 5 | 10 | 22.2 | 0.3 | 28.5 | 22.5 | M4×0.7 depth 6 |
| NMXQ12 | 43 | 29 | 14.5 | 5 | 13 | 29.2 | 0.3 | 37 | 29 | M5×0.8 depth 8 |
| NMXQ16 | 54 | 42 | 21 | 6.5 | 15.5 | 35.7 | 0.3 | 41 | 30 | M6×1 depth 10 |
| NMXQ20 | 60 | 35 | 17.5 | 7 | 18 | 42.5 | 0.5 | 44.5 | 30.5 | M6×1 depth 12 |
| NMXQ25 | 74 | 44 | 22 | 6.5 | 21.5 | 49.5 | 0.5 | 50 | 35 | M8×1.25 depth 15 |

**R- With end lock** NMXQ [Bore size] – [Stroke] [ ] R

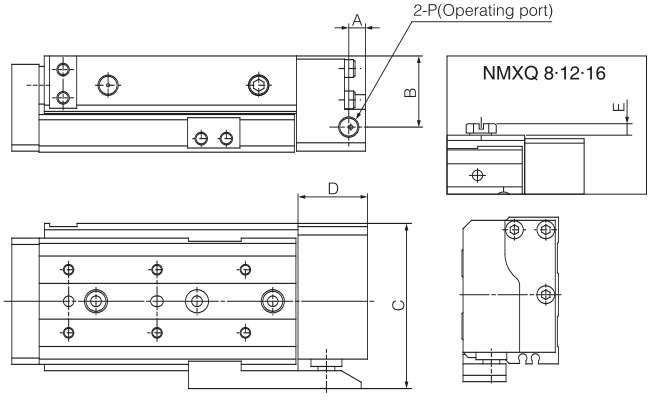


With end lock

| Model | A | B | C | D | E | P |
|---|---|---|---|---|---|---|
| NMXQ8 | 4 | 17.5 | 40.5 | 16 | 3 | M5×0.8 |
| NMXQ12 | 5 | 22 | 51 | 22 | 3 | M5×0.8 |
| NMXQ16 | 6 | 29 | 65.5 | 25 | 3 | M5×0.8 |
| NMXQ20 | 8 | 34 | 78.5 | 33 | - | 1/8" |
| NMXQ25 | 8 | 40 | 94 | 37 | - | 1/8" |

**P-Axial piping type** NMXQ [Bore size] – [Stroke] [ ] P

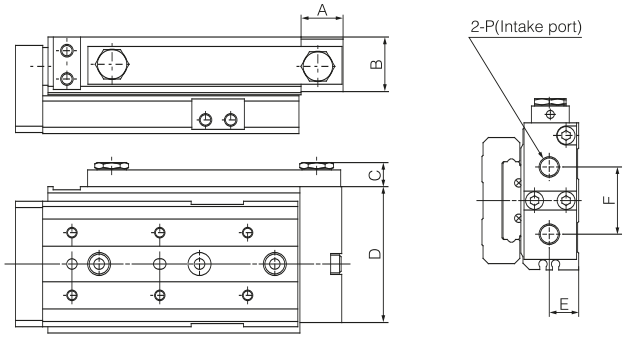


Axial piping type

| Model | A | B | C | D | E | F | P |
|---|---|---|---|---|---|---|---|
| NMXQ6 | 12 | 12.5 | 6.3 | 26 | 5.5 | 12 | M5×0.8 |
| NMXQ8 | 12 | 14.5 | 6.3 | 31 | 6.5 | 15 | M5×0.8 |
| NMXQ12 | 13 | 16.5 | 6.3 | 41 | 8.5 | 20 | M5×0.8 |
| NMXQ16 | 14 | 21 | 6.3 | 52 | 11 | 26 | M5×0.8 |
| NMXQ20 | 20 | 26 | 11.5 | 65 | 14 | 32 | 1/8" |
| NMXQ25 | 20 | 32 | 11.5 | 79 | 17 | 40 | 1/8" |